# SANMOTION

SERVO SYSTEMS

# R

ADVANCED MODEL

**48 VDC 20 W-200 W**

Ver.2.3

SANYO DENKI

# SANMOTION R

## SERVO SYSTEMS

ADVANCED MODEL

**Input voltage** 48 VDC

## Servo amplifier

Pulse input Single-axis | EtherCAT Single-axis | EtherCAT Multi-axis

**Amp. capacity** 40 A

## Servo motor

**Flange size** 20 mm sq., 40 mm sq., 60 mm sq.,

**Rated output** 20 W to 200 W

## Contents

NEW PRODUCTS High Performance Servo Systems

# SANMOTION R

## SERVO SYSTEMS

ADVANCED MODEL

This low voltage, compact servo system achieves the same high performance as an AC input servo amplifier.
In addition to our pulse input type, our lineup also includes servo amplifiers equipped with high-speed fieldbus EtherCAT interface and an ultracompact servo motor with a 20 mm flange size.

### Lineup

| Servo Motor | | Servo Amplifier | | |
|---|---|---|---|---|
| Rated Output [W] | Flange size | Pulse input Single-axis | EtherCAT Single-axis | EtherCAT Multi-axis |
| 20 to 30 | 20mm sq.  This high output, compact motor features 17% improved peak torque and 8.5% reduced mass compared with our conventional product.*1 |  This product has been downsized by about 30% in volume and 31% in mass from our AC input servo amplifier.*2 Applicable motor capacity: 20 W to 200 W |  This model is equipped with high-speed fieldbus EtherCAT interface. The high-speed communication cycle of 0.125 ms allows smooth device operation. EtherCAT Conformance tested Applicable motor capacity: 20 W to 200 W |  This 4-axis integrated model is compact and space-saving. Regenerative power can be used to drive other motors, contributing to making devices energy-efficient. EtherCAT Conformance tested Applicable motor capacity: 120 W in total for 4 axes or up to 300 W |
| 30 to 80 | 40mm sq.  | | | |
| 100 to 200 | 60mm sq.  | | | |

## Compact and lightweight

In our pursuit of making compact and lightweight products, we have reduced the volume of the pulse input type by about 30% and in mass by about 31%, while still maintaining the same high performance as an AC input servo amplifier.*2
Servo motors with 20 mm sq. flanges are also available, allowing for mounting within chip mounters or other equipment with limited installation space.

*1: Servo motor P series Model no. P50B02002DXS00
*2: AC servo amplifier "SANMOTION R" Model no. RS2A01A

## Low voltage specification

The main circuit power supply is 48 VDC, a highly safe, low voltage specificiation with low risk of electrical shock. This product can be used in equipment in conformity with the EU Low Voltage Directive.
It is ideal for low voltage applications such as semiconductor manufacturing equipment, small robots, chip mounters, option axes of machine tools, and conveying machines.


Semiconductor equipment


Chip mounter

## With High-Speed Fieldbus EtherCAT Interface

With a 100 Mbps high-speed fieldbus system, EtherCAT contributes to shortening takt times.
In addition, with the high-speed EtherCAT 0.125 ms communication cycle, positioning commands can be subdivided for smooth device operation.

EtherCAT® Conformance tested

Additional functions of EtherCAT single-axis and multi-axis types

- The models include the EtherCAT high-precision command synchronization function, and a position feedback synchronization function with independent communication via a dedicated line. These functions contribute to enhanced controllability of gantry systems.
- In addition to the trapezoidal trajectory profile generated during positioning, the new models also include a jerk profile function*, for modifying acceleration/deceleration speed. This function helps reduce vibration during acceleration, deceleration, and settling.
  * A function that generates an S-shaped movement profile by modifying acceleration/deceleration speed
- Equipped with a Safe Torque Off function.

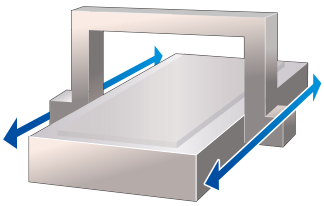

Gantry system

## Easy startup and servo tuning

"SANMOTION MOTOR SETUP SOFTWARE" displays the parameters required for operation in an easy-to-understand manner in order to enable fast and easy equipment startup.
This model has a jog function for testing the servo motor and amplifier connection, without the need to connect to a host device.
By connecting with the setup software this model offers a variety of servo tuning support functions depending on mechanical and load conditions. This dramatically shortens time required for servo tuning.

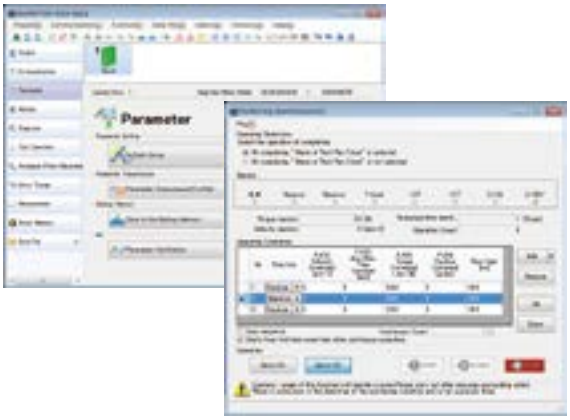


## Auto-tuning

The servo amplifier automatically optimizes servo gain and filter frequency in real time.

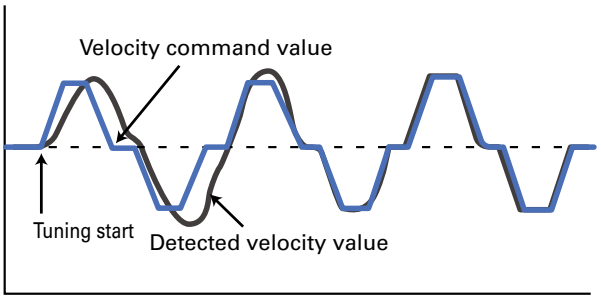


## Feed-forward vibration suppression control

With feed-forward vibration suppression control, vibrations at the end effector and base of a machine can be suppressed through simple tuning procedures. Vibration control frequencies are selectable.

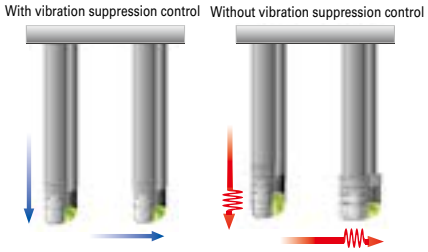

## Low cogging torque

Cogging torque has been reduced in 40 mm sq. to 60 mm sq. servo motors compared to our conventional products, achieving smoother movement at low speeds.

Comparison of cogging torque waveform

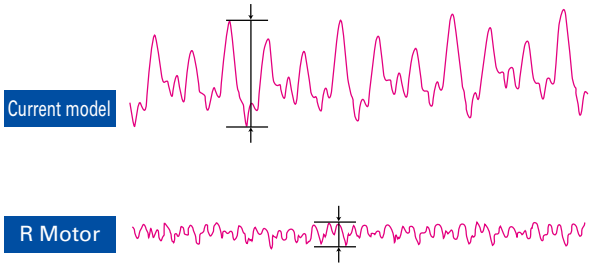


(Representative example)

## Waterproof and dustproof

Our 40 mm sq. to 60 mm sq. servo motors have IP65-rated high waterproof and dustproof characteristics, allowing them to work in severe environments. Servo motors can be modified to IP67 as an option.

* Excluding shaft feedthrough and cable end.


## High-precision battery-less optical absolute encoder

The high-precision battery-less optical absolute encoder (Model No. HA035) comes standard on 40 mm sq. and 60 mm sq. servo motors.
It features a wide -20 to +105°C operating temperature range, and a maximum of 147 m/s$^2$ (15G)* of environmental vibration.
The encoder can be used in severe environments.

* When the encoder is mounted on a servo motor, the operating temperature and the environmental vibration vary depending on the servo motor specification.

As an optional specification, high-precision specifications with a maximum resolution of 1048576 (20 bits) during single rotation and an absolute angle accuracy of approximately 0.0167 deg within a rotation (1 min.) can be selected.

In addition, selecting an encoder that is optimal to the device is also available as an option. Refer to the following table.

### Serial encoder

| Encoder type | Applicable servo motor | Resolution during single rotation | Total number of rotations during multiple rotations | Encoder model no. | Optional specifications |
|---|---|---|---|---|---|
| **Single-turn absolute encoder**<br>This is a magnetic detection type single-turn encoder. Its outstanding ruggedness makes it highly resistant against moisture, oil, and dust. | 20 mm sq. | 8192 (13 bits) | – | Model No. MA018 | |
| **Battery-less optical absolute encoder**<br>This is a high-precision battery-less optical multi-turn encoder.<br>It does not use batteries, which need to be replaced; therefore, the encoder does not require maintenance. This encoder can be broadly used for general industrial equipment including machine tools and robots. | 40 mm sq.<br>60 mm sq. | 131072 (17 bits) | 65536 (16 bits) | Model No. HA035 | - Resolution during single rotation: 1048576 (20 bits)<br>- Absolute angular accuracy within one rotation: Approx. 0.0167 deg (one minute) or lower (standard is approx. 0.1667 deg (ten minutes) or lower.)<br>- Baud rate: 4.0 Mbps (standard is 2.5 Mbps) |
| **Optical absolute encoder for incremental systems**<br>This is a slim and single-turn optical encoder.<br>Enables wire-saving and size-reduction for applications that use pulse encoders. | 40 mm sq.<br>60 mm sq. | 131072 (17 bits) | – | Model No. PA035S | - Resolution during single rotation: 1048576 (20 bits)<br>-Baud rate: 4.0 Mbps (standard is 2.5 Mbps) |
| Option<br>**Resolver method battery-less absolute encoder**<br>This is a resolver method battery-less multi-turn encoder. Being a resolver method encoder with outstanding ruggedness, it is ideal for equipment used in harsh environments such as injection molding machines and robots. | 40 mm sq.<br>60 mm sq. | 131072 (17 bits) | 65536 (16 bits) | Model No. RA035C | -Baud rate: 4.0 Mbps (standard is 2.5 Mbps) |

# Setup Software (Option)

This software allows you to set servo system parameters from a PC.
It also allows you to easily start up or test run the servo system.
The software can be downloaded from Product Information on our website.
URL : http://www.sanyodenki.com

Start-up screen


■ Setup software title:

| |
|---|
| SANMOTION MOTOR SETUP SOFTWARE |

■ Main Functions

| |
|---|
| Parameter settings (settings by group, settings by function) |
| Diagnosis (alarm display, warning display, alarm cancellation) |
| Test run execution (speed JOG, position JOG, motor starting point search, serial encoder clearance) |
| Servo tuning (notch filter tuning, FF vibration control frequency tuning) |
| Various measurement functions (operating waveform display, machinery frequency response measurement) |

■ Supported OS

| |
|---|
| Windows XP (SP3 or higher) / Vista / 7 / 8 |

* See our website for details on supported versions.

Main screen

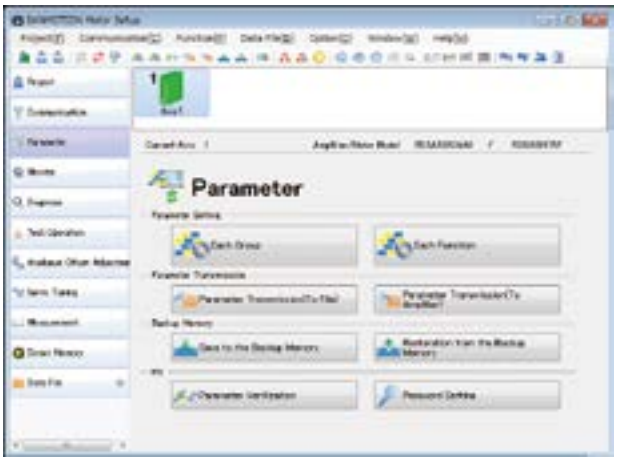


Setting of each group Parameter

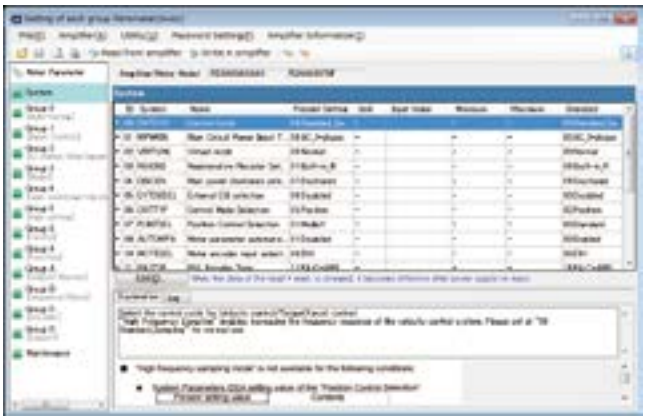

Parameters can be set, saved, and read from a PC.

# Setup Software (Option)

Diagnosis screen

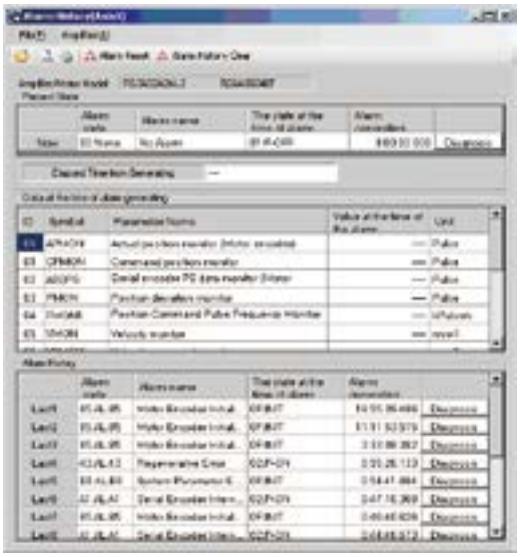

The current and previous 7 alarm occurrences can be checked.

Test run

Simple test run of servo motor by issuing velocity commands and position commands from a PC. (Position JOG in operation shown in screen)

Measurement

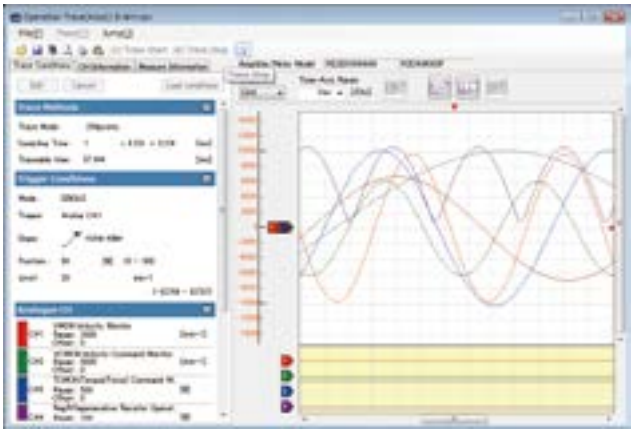

Operation Trace
Graphically displays servo motor's speed, torque and internal status.

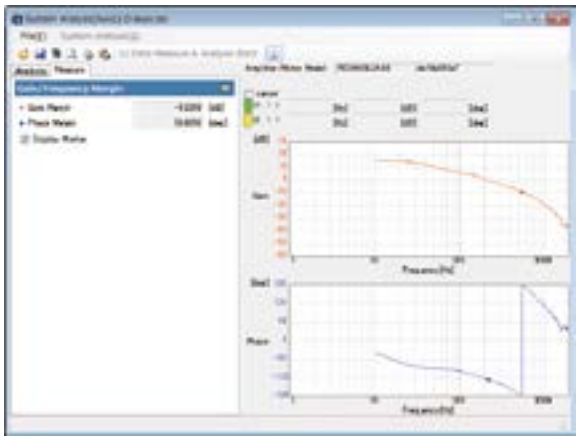

System Analysis
Analyzes servo system frequency characteristics.

## List of Combinations of Servo Amplifiers and Servo Motors

Servo motor standard specifications···Output shaft: straight, oil seal: none, connecting method: cable

| Servo motor | | | Page | | Servo amplifier model name | | | |
|---|---|---|---|---|---|---|---|---|
| Rated output [W] | Flange size | Model name | Specifications | Exterior drawing | Pulse input Single-axis | EtherCAT Single-axis | EtherCAT Multi-axis (Up to 4 axes) | |
| 20 | 20mm sq. | R2GA02D20F | p. 22 | p. 24 | RF2G21A0A00 | RS2K04A2HL5／RS2K04A2HA5 | RF2J24A0HL5 (Up to 120W in total) | RF2K24A0HL5 (Up to 300W in total) |
| 30 | 20mm sq. | R2GA02D30F | p. 22 | p. 24 | | | | |
| 30 | 40mm sq. | R2GA04003F | p. 22 | p. 24 | | | | |
| 50 | 40mm sq. | R2GA04005F | p. 23 | p. 24 | | | - | |
| 80 | 40mm sq. | R2GA04008D | p. 23 | p. 24 | | | | |
| 100 | 60mm sq. | R2GA06010D | p. 23 | p. 24 | | | | |
| 200 | 60mm sq. | R2GA06020D | p. 23 | p. 24 | | | | |

### Option

| Servo amplifier type | Pulse input Single-axis | EtherCAT Single-axis | EtherCAT Multi-axis |
|---|---|---|---|
| Regenerative unit | RF1BB00 → p. 25 | - | - |
| Power input connector for regenerative unit | AL-00329461-01 → p. 25 | - | - |
| Cable with connector for regenerative unit | AL-00753589-01 → p. 25 | - | - |
| PC cable | AL-00490833-01 → p. 26 | AL-00689703-01 → p. 28 | AL-00689703-01 → p. 29 |
| Power cable | AL-00745943-01 → p. 26 | - | AL-00921367-01 → p. 29 |
| Regenerative resistor cable | - | - | AL-00921368-01 → p. 29 |
| Motor power cable | AL-00745944-01 → p. 26 | - | AL-00921369-01<br>AL-00921369-02<br>AL-00921369-03 → p. 29 |
| I/O cable set | AL-00745949-01 → p. 26 | - | - |
| Serial encoder cable | AL-00745946-01 → p. 27 | AL-00921370-01<br>AL-00921370-02<br>AL-00921370-03 → p. 28 | AL-00921370-01<br>AL-00921370-02<br>AL-00921370-03 → p. 29 |
| Analog monitor box | Q-MON-5 → p. 27 | Q-MON-3 → p. 28 | - |
| Side mounting bracket | - | - | AL-00921371-01 → p. 29 |
| External regenerative resistor | REGIST-080W50B, REGIST-120W50B → p. 30 | | |
| | REGIST-220W50B → p. 30 | | REGIST-220W20B → p. 30 |

## How to Read Model Numbers

Not all combinations shown below are valid. Option specifications are also provided.
For available models of standard products, refer to "Standard Model Number List".

### ■ Servo Amplifier

Pulse input Single-axis

**RF2 G 21 A 0 A 00**

- 00: Specification Identification
- A: Interface Type
  A...Pulse train, NPN (sink) output
- 0: Motor Encoder Type
  0...Serial encoder
- A: Servo Motor Type
  A...Rotary motor
- 21: Servo Amplifier Capacity
  21...40 A
- G: Input Voltage
  G...48 VDC
  (Contact us for the request of 24 VDC specification.)
- RF2: **R ADVANCED MODEL Series**
  RF2

EtherCAT Single-axis / EtherCAT Multi-axis

**RS2 K 04 A 2 H A 5**

- 5: Option 2
  5...With Safe Torque Off function (With delay circuit)
  * If you do not use the Safe Torque Off function, mount the mask connector provided.
- A: Option 1
  Single-axis: A...Equipped with internal regenerative resistor/With DB,
  L...Not equipped with internal regenerative resistor/With DB
  Multi-axis: L...Not equipped with internal regenerative resistor/Without DB
- H: Interface Type
  H... EtherCAT interface (high speed communication)
- 2: Motor Encoder Type
  Single-axis: 2...Serial encoder
  Multi-axis : 0...Serial encoder
- A: Servo Motor Type
  A...Rotary motor
- 04: Servo Amplifier Capacity
  Single-axis : 04...40 A
  Multi-axis : 24...40 A/axis, 4-axis specification
- K: Input Voltage
  Single-axis: K...48 VDC
  Multi-axis: J...48 VDC (fanless), K...48 VDC (with fan)
  (Contact us for 24 VDC specifications)
- RS2: R ADVANCED MODEL Series
  Single-axis: RS2
  Multi-axis: RF2

### ■ Servo Motor

**R 2 GA 04 003 F X R 03 M**

- M: Additional Specification Identification
  M...Conforms to CE and UL
- 03: Specification Identification
- R: Encoder Type
  Serial Encoder
  R...Battery-less optical absolute encoder (HA035)
  H...Optical absolute encoder for incremental systems (PA035S)
  C...Single-turn absolute encoder (MA018)
- X: Holding Brake
  X...No brake
  B...90 VDC brake
  C...24 VDC brake
- F: Maximum Rotation Speed
  For the numeric values, see the specifications on p. 22-23.
- 003: Rated Output
  D20...20 W
  003/D30...30 W
  005...50 W
  008...80 W
  010...100 W
  020...200 W
- 04: Flange Size
  02...20 mm sq.
  04...40 mm sq.
  06...60 mm sq.
- GA: Power Supply Voltage
  GA...48 VDC
- 2: Servo Motor Type
  2...Medium inertia
- R: R Series

## Servo Amplifier

| Type | No. of control axes | Main circuit power supply | Control power | Encoder type | General output | Internal regenerative resistor | Safe torque off function | Amplifier capacity | Model no. | Page | |
|---|---|---|---|---|---|---|---|---|---|---|---|
| | | | | | | | | | | Specifications | Dimensions |
| Pulse input type | 1 | 48 VDC | 5 VDC | Serial encoder | Sink | No | No | 40 A | RF2G21A0A00 | p. 12, 18 | p. 20 |
| EtherCAT interface type | 1 | 48 VDC | 24 VDC | Serial encoder | Photo relay | No | Yes (With delay circuit) | 40 A | RS2K04A2HL5 | p. 14, 18 | p. 20 |
| | | | | | | Yes | | 40 A | RS2K04A2HA5 | p. 14, 18 | p. 20 |
| | 4 | 48 VDC | 24 VDC | Serial encoder | Photo relay | No | Yes (With delay circuit) | 40 A | RF2J24A0HL5 | p. 16, 18 | p. 20 |
| | | | | | | | | 40 A | RF2K24A0HL5 | p. 16, 18 | p. 20 |

* Our standard servo amplifier achieves the KC Mark of safety and conforms to the international UL, c-UL, EN standards.
Contact us for the request of main circuit power supply 24 VDC.

## R2 Servo Motor Small Size, Small Capacity, Medium Inertia

**Standard specifications Output shaft: straight, oil seal: none, connection: cable (no connector)**

| Rated output | Motor flange size | Protection code | Holding brake | CE and UL approved | Model no. | Page | |
|---|---|---|---|---|---|---|---|
| | | | | | Single-turn absolute encoder (Model No. MA018) | Specifications | Dimensions |
| 20 W | 20 mm sq. | IP40 | No | - | R2GA02D20FXC00 | p. 22 | p. 24 |
| 30 W | | | | | R2GA02D30FXC00 | p. 22 | p. 24 |

## R2 Servo Motor Small Capacity, Medium Inertia

**Standard specifications Output shaft: straight, oil seal: none, connection: cable (no connector)**

| Rated output | Motor flange size | Protection code | Holding brake | CE and UL approved | Model no. | | Page | |
|---|---|---|---|---|---|---|---|---|
| | | | | | Battery-less optical absolute encoder (Model No. HA035) | Optical absolute encoder for incremental systems (Model No. PA035S) | Specifications | Dimensions |
| 30 W | 40 mm sq. | IP65 | No | - | R2GA04003FXR03 | R2GA04003FXH03 | p. 22 | p. 24 |
| | | | | Yes | R2GA04003FXR03M | R2GA04003FXH03M | p. 22 | p. 24 |
| | | | Yes (24 VDC) | - | R2GA04003FCR03 | R2GA04003FCH03 | p. 22 | p. 24 |
| | | | | Yes | R2GA04003FCR03M | R2GA04003FCH03M | p. 22 | p. 24 |
| 50 W | 40 mm sq. | IP65 | No | - | R2GA04005FXR03 | R2GA04005FXH03 | p. 23 | p. 24 |
| | | | | Yes | R2GA04005FXR03M | R2GA04005FXH03M | p. 23 | p. 24 |
| | | | Yes (24 VDC) | - | R2GA04005FCR03 | R2GA04005FCH03 | p. 23 | p. 24 |
| | | | | Yes | R2GA04005FCR03M | R2GA04005FCH03M | p. 23 | p. 24 |
| 80 W | 40 mm sq. | IP65 | No | - | R2GA04008DXR03 | R2GA04008DXH03 | p. 23 | p. 24 |
| | | | | Yes | R2GA04008DXR03M | R2GA04008DXH03M | p. 23 | p. 24 |
| | | | Yes (24 VDC) | - | R2GA04008DCR03 | R2GA04008DCH03 | p. 23 | p. 24 |
| | | | | Yes | R2GA04008DCR03M | R2GA04008DCH03M | p. 23 | p. 24 |
| 100 W | 60 mm sq. | IP65 | No | - | R2GA06010DXR03 | R2GA06010DXH03 | p. 23 | p. 24 |
| | | | | Yes | R2GA06010DXR03M | R2GA06010DXH03M | p. 23 | p. 24 |
| | | | Yes (24 VDC) | - | R2GA06010DCR03 | R2GA06010DCH03 | p. 23 | p. 24 |
| | | | | Yes | R2GA06010DCR03M | R2GA06010DCH03M | p. 23 | p. 24 |
| 200 W | 60 mm sq. | IP65 | No | - | R2GA06020DXR03 | R2GA06020DXH03 | p. 23 | p. 24 |
| | | | | Yes | R2GA06020DXR03M | R2GA06020DXH03M | p. 23 | p. 24 |
| | | | Yes (24 VDC) | - | R2GA06020DCR03 | R2GA06020DCH03 | p. 23 | p. 24 |
| | | | | Yes | R2GA06020DCR03M | R2GA06020DCH03M | p. 23 | p. 24 |

Note: For motors with an IP67 rating, please contact us.

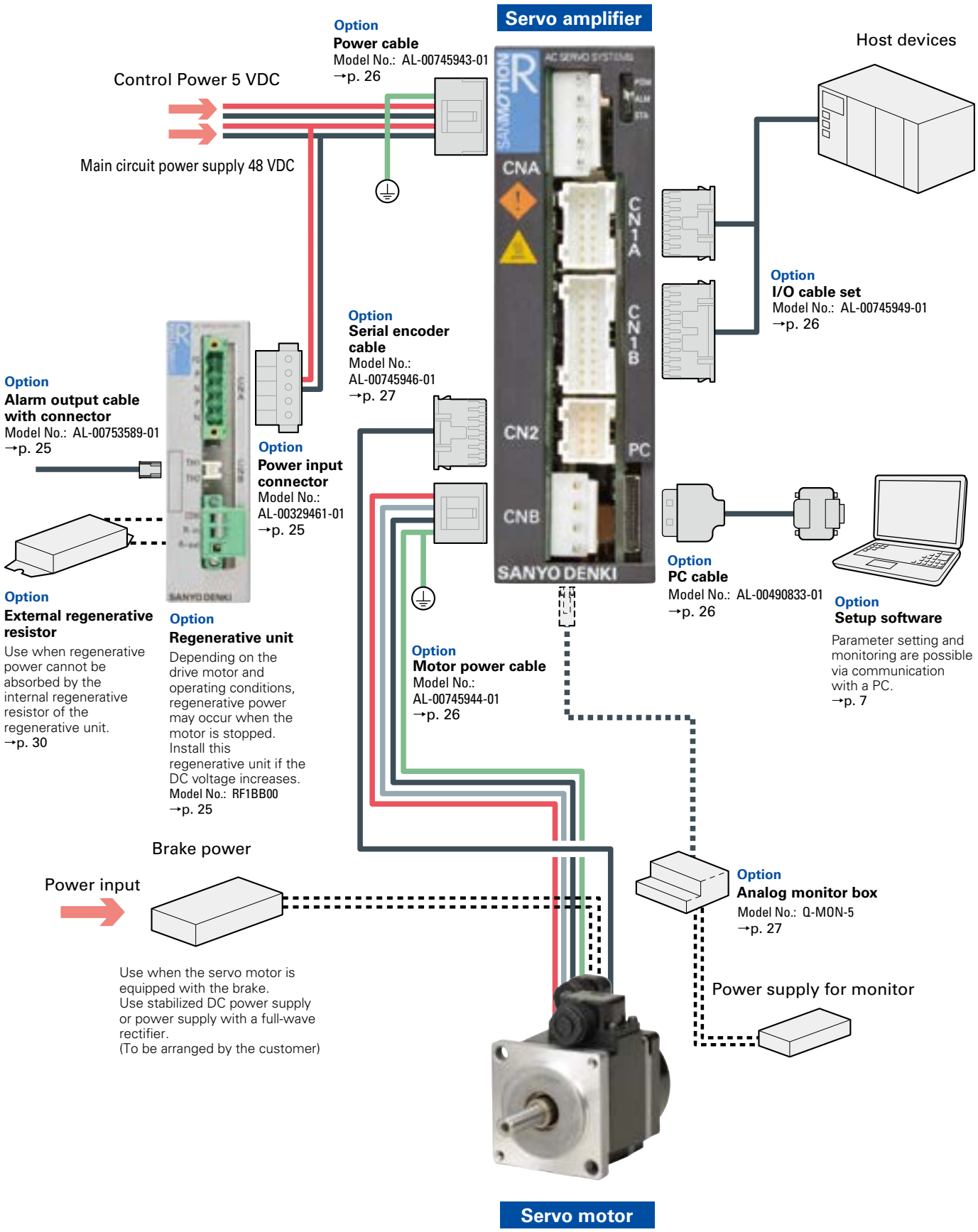
Servo amplifier
Host devices
Control Power 5 VDC
Main circuit power supply 48 VDC
Option
Power cable
Model No.: AL-00745943-01
→p. 26
CNA
CN1A
CN1B
CN2
PC
CNB
SANYO DENKI
Option
I/O cable set
Model No.: AL-00745949-01
→p. 26
Option
Serial encoder cable
Model No.: AL-00745946-01
→p. 27
Option
Alarm output cable with connector
Model No.: AL-00753589-01
→p. 25
Option
Power input connector
Model No.: AL-00329461-01
→p. 25
Option
PC cable
Model No.: AL-00490833-01
→p. 26
Option
Setup software
Parameter setting and monitoring are possible via communication with a PC.
→p. 7
Option
External regenerative resistor
Use when regenerative power cannot be absorbed by the internal regenerative resistor of the regenerative unit.
→p. 30
Option
Regenerative unit
Depending on the drive motor and operating conditions, regenerative power may occur when the motor is stopped. Install this regenerative unit if the DC voltage increases.
Model No.: RF1BB00
→p. 25
Option
Motor power cable
Model No.: AL-00745944-01
→p. 26
Brake power
Power input
Use when the servo motor is equipped with the brake.
Use stabilized DC power supply or power supply with a full-wave rectifier.
(To be arranged by the customer)
Option
Analog monitor box
Model No.: Q-MON-5
→p. 27
Power supply for monitor
Servo motor

# External Wiring Diagram

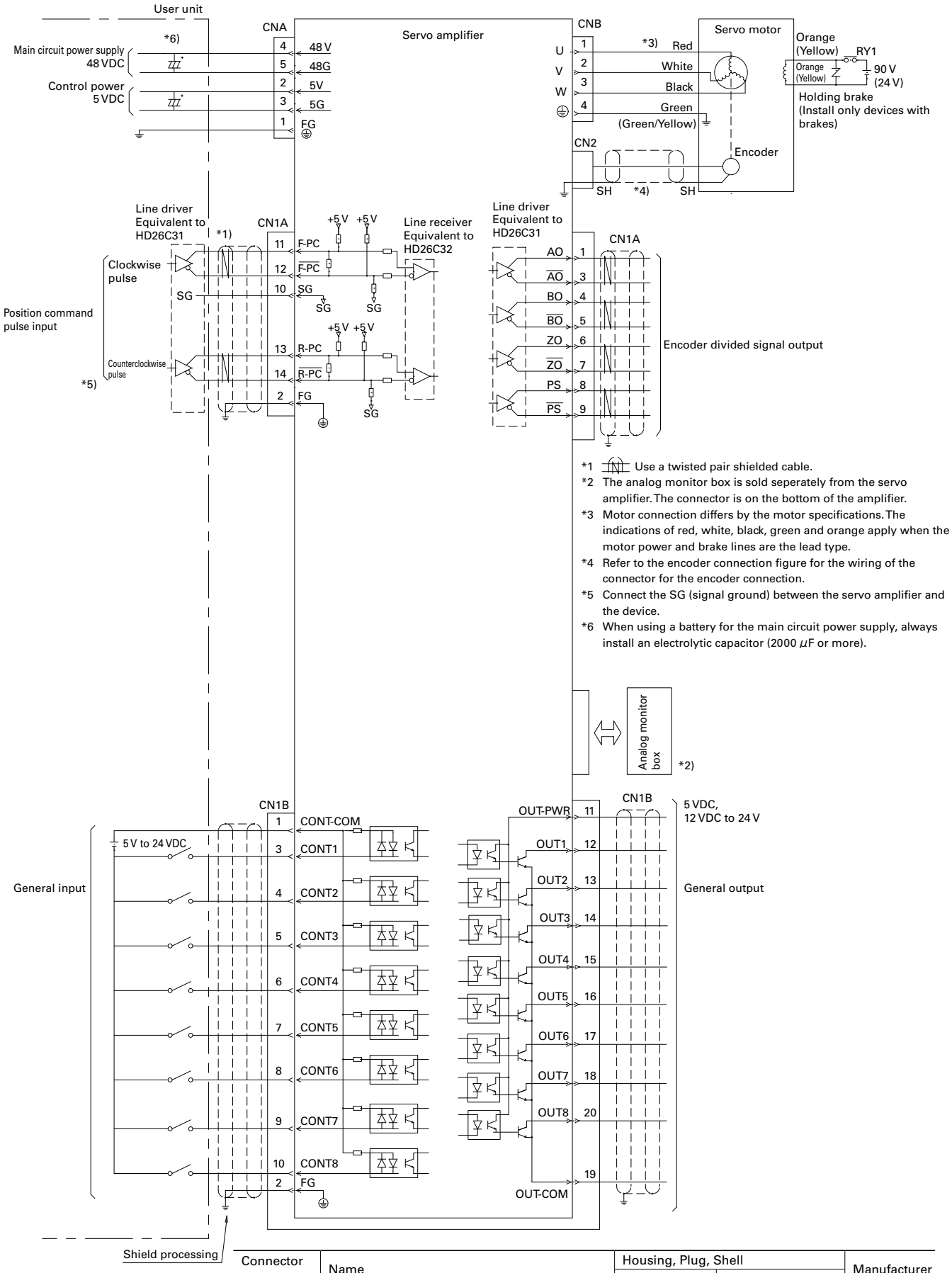


*1 Use a twisted pair shielded cable.
*2 The analog monitor box is sold seperately from the servo amplifier. The connector is on the bottom of the amplifier.
*3 Motor connection differs by the motor specifications. The indications of red, white, black, green and orange apply when the motor power and brake lines are the lead type.
*4 Refer to the encoder connection figure for the wiring of the connector for the encoder connection.
*5 Connect the SG (signal ground) between the servo amplifier and the device.
*6 When using a battery for the main circuit power supply, always install an electrolytic capacitor (2000 μF or more).

The external power supply is to be arranged by the customer.

| Connector No. | Name | Housing, Plug, Shell | | Manufacturer |
|---|---|---|---|---|
| | | Housing | Contact | |
| CNA | Main power supply, Control power input connector | VHR-5N | SVH-41T-P1.1 | J.S.T. Mfg. Co.,Ltd. |
| CNB | Servo motor power line connector | VHR-4N | SVH-41T-P1.1 | |
| CN1A | Connector for host device line receiver and driver signals | PADP-14V-1-S | SPH-002GW-P0.5S | |
| CN1B | Connector for host device general-purpose I/O signals | PADP-20V-1-S | SPH-002GW-P0.5S | |
| CN2 | Connector for encoder signal | PADP-10V-1-S | SPH-002GW-P0.5S | |

# System Configuration

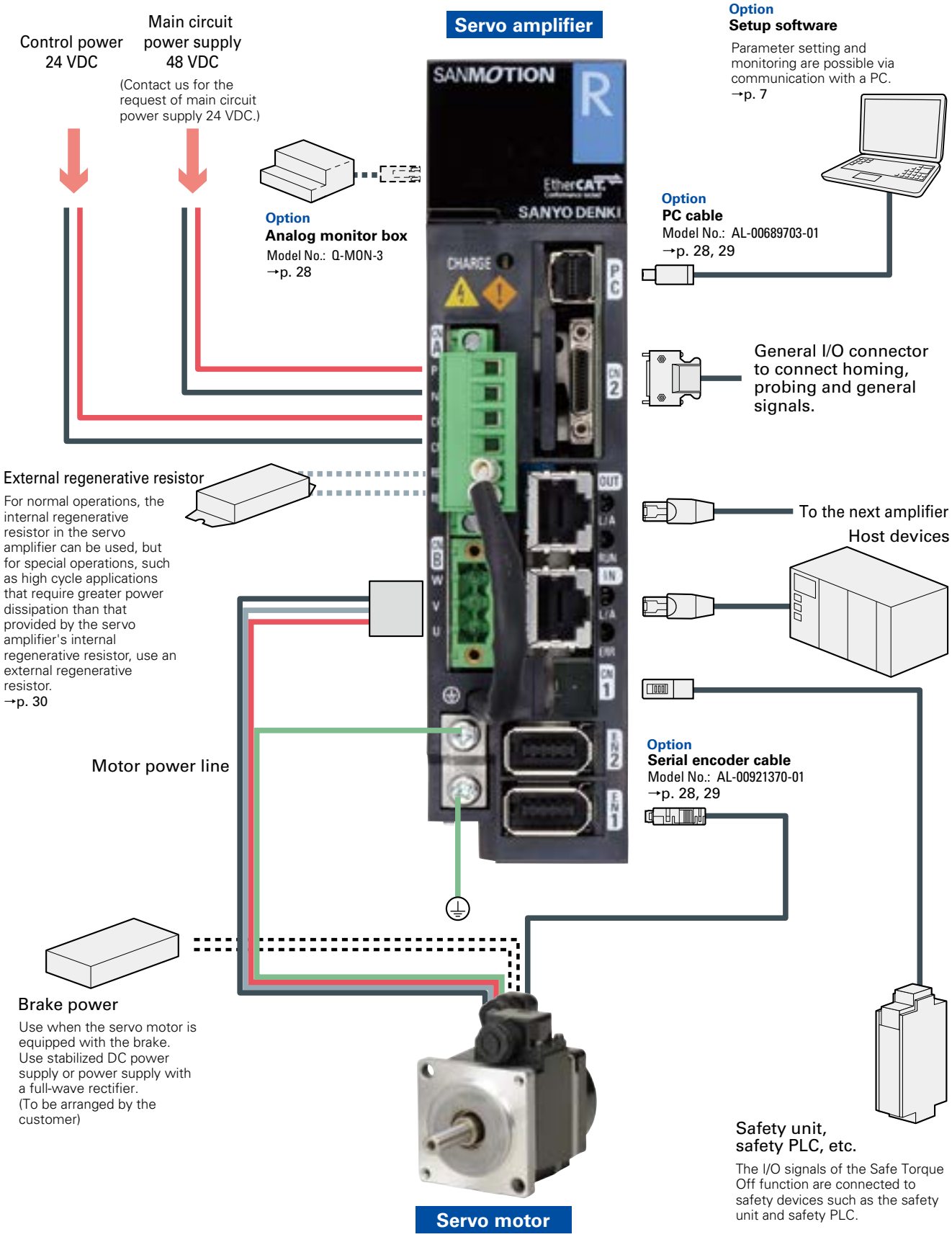

# External Wiring Diagram

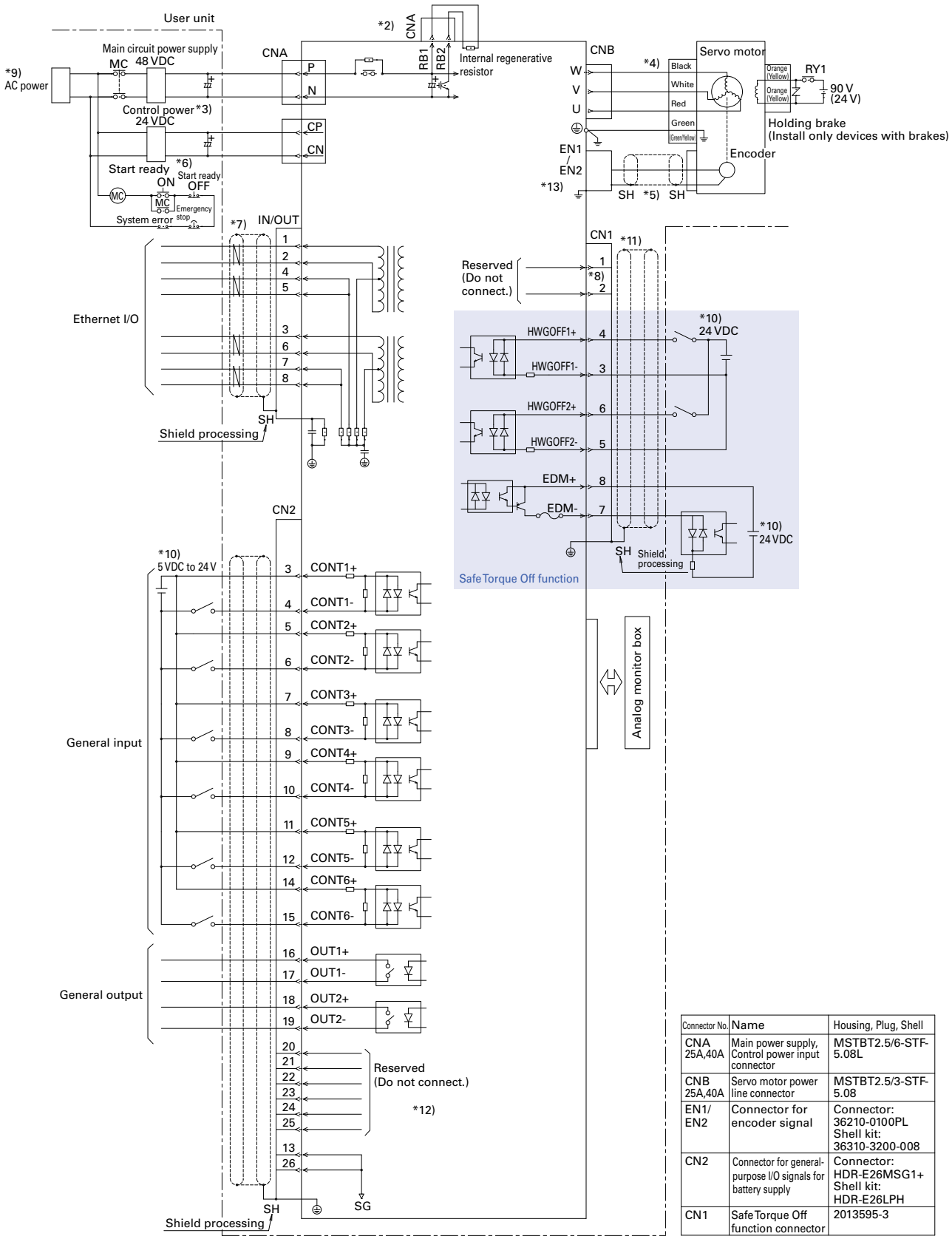


| Connector No. | Name | Housing, Plug, Shell |
|---|---|---|
| CNA 25A,40A | Main power supply, Control power input connector | MSTBT2.5/6-STF-5.08L |
| CNB 25A,40A | Servo motor power line connector | MSTBT2.5/3-STF-5.08 |
| EN1/ EN2 | Connector for encoder signal | Connector: 36210-0100PL Shell kit: 36310-3200-008 |
| CN2 | Connector for general-purpose I/O signals for battery supply | Connector: HDR-E26MSG1+ Shell kit: HDR-E26LPH |
| CN1 | Safe Torque Off function connector | 2013595-3 |

*1 Use a twisted pair shielded cable.

*2 Connect a regenerative resistor between the RB1-RB2 terminals.
When using an external regenerative resistor, remove the wiring of the internal regenerative resistor connected between the RB1 and RB2 terminals and then connect the external regenerative resistor between the RB1 and RB2 terminals.

*3 · When the wiring from the DC power supply to the servo amplifier is long, install an electrolytic capacitor on the amplifier side between P-N and CP-CN if necessary.
· When using a battery for the DC power supply between P-N and CP-CN, always install an electrolytic capacitor (2000 μF or more).
· Contact us for the request of main circuit power supply 24 VDC.

*4 Motor connection differs by the motor specifications.
The indications of red, white, black, green and orange apply when the motor power and brake lines are the lead type.

*5 Refer to the encoder connection figure for the wiring of the connector for the encoder connection.

*6 Turn the power off as a way to shut off the main circuit power for the protection of the servo amplifier during emergency stops.

*7 Use a shielded twisted pair cable (STP) with Category 5e (TIA standards) or higher.

*8 Do not connect anything to CN1 pin 1 and 2.

*9 An earth leakage circuit breaker conforming to UL and either IEC or EN standards is recommended.

*10 The external power supply is to be arranged by the customer.

*11 CN1 is a connector for the Safe Torque Off function. Connect the connector to the safety function to make the Safe Torque Off function active. Otherwise, the servo can not be turned on (no power to the motor).

*12 Do not connect anything to CN2-20 to 25.

*13 When using a pulse encoder in a semi-closed system, connect it to EN2.

# System Configuration

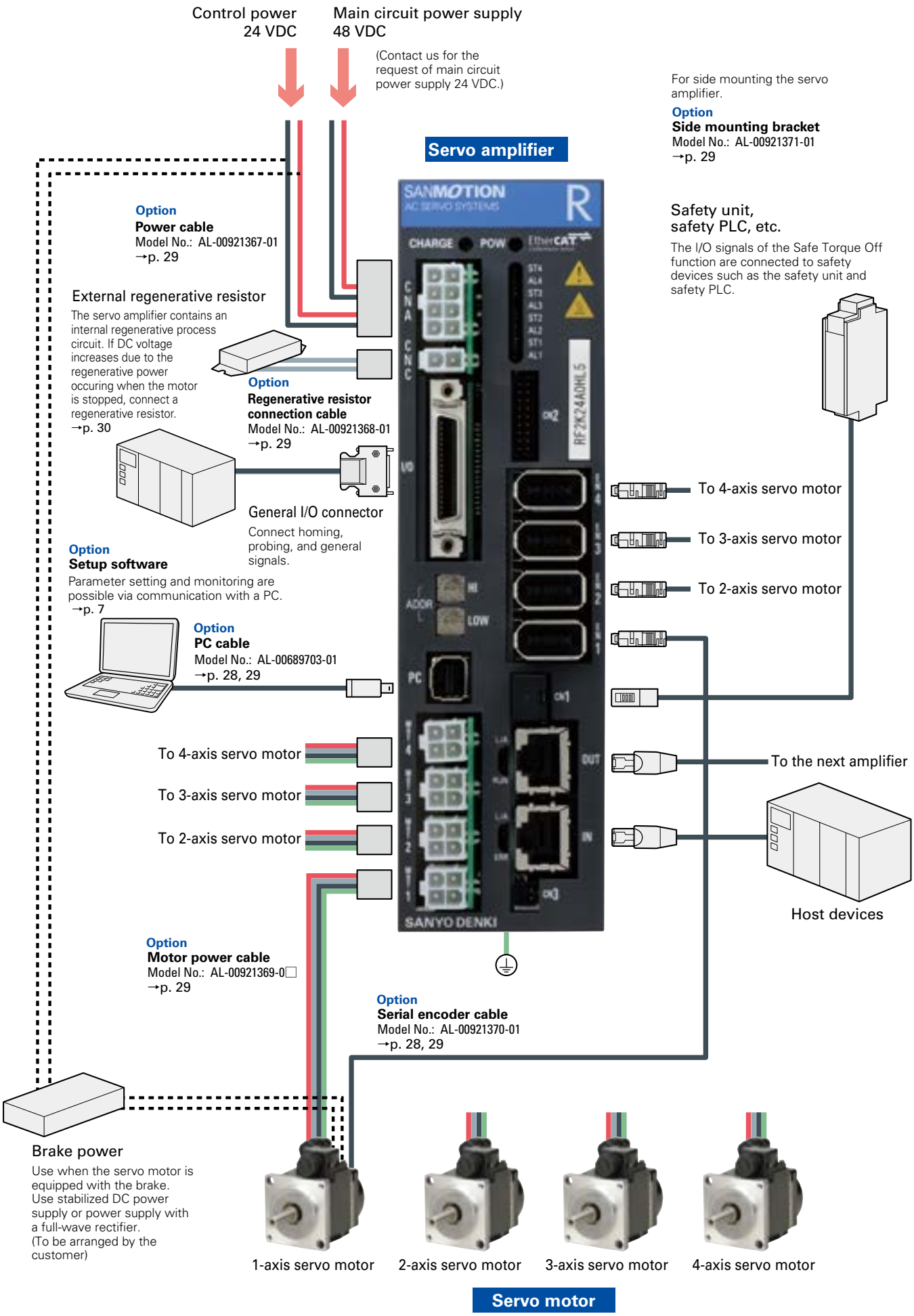

# External Wiring Diagram

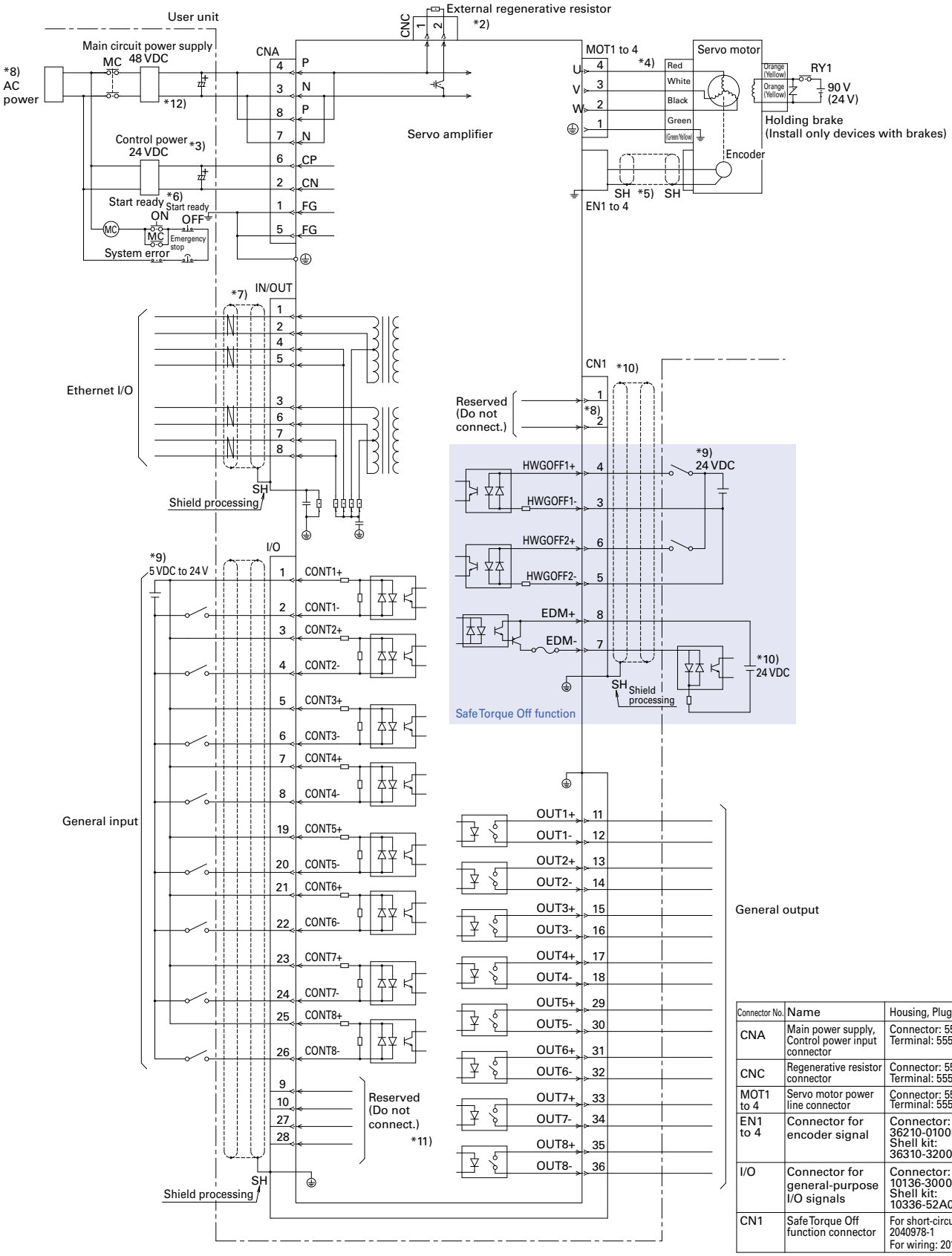


| Connector No. | Name | Housing, Plug, Shell |
|---|---|---|
| CNA | Main power supply, Control power input connector | Connector: 5557-08R<br>Terminal: 5556PBT3 |
| CNC | Regenerative resistor connector | Connector: 5557-02R<br>Terminal: 5556PBT3 |
| MOT1 to 4 | Servo motor power line connector | Connector: 5557-04R<br>Terminal: 5556PBT3 |
| EN1 to 4 | Connector for encoder signal | Connector: 36210-0100PL<br>Shell kit: 36310-3200-008 |
| I/O | Connector for general-purpose I/O signals | Connector: 10136-3000PE<br>Shell kit: 10336-52A0-008 |
| CN1 | Safe Torque Off function connector | For short-circuiting: 2040978-1<br>For wiring: 2013595-3 |

*1 Use a twisted pair shielded cable.

*2 The servo amplifier contains an internal regenerative process circuit. If DC voltage increases due to the regenerative power occuring when the motor is stopped, connect a regenerative resistor.

*3 · When the wiring from the DC power supply to the servo amplifier is long, install an electrolytic capacitor on the amplifier side between P-N and CP-CN if necessary.
· When using a battery for the DC power supply between P-N and CP-CN, always install an electrolytic capacitor (2000 μF or more).

*4 Motor connection differs by the motor specifications. The indications of red, white, black, green and orange apply when the motor power and brake lines are the lead type.

*5 Refer to the encoder connection figure for the wiring of the connector for the encoder connection.

*6 Turn the power off as a way to shut off the main circuit power for the protection of the servo amplifier during emergency stops.

*7 Use a shielded twisted pair cable (STP) with Category 5e (TIA standards) or higher.

*8 An earth leakage circuit breaker conforming to UL and either IEC or EN standards is recommended.

*9 The external power supply is to be arranged by the customer.

*10 CN1 is a connector for the Safe Torque Off function. Connect the connector to the safety function to make the Safe Torque Off function active. Otherwise, the servo will not be turned on (no power to the motor).

*11 Do not connect anything to I/O-9, 10, 27 and 28.

*12 Contact us for main circuit power supply 24 VDC.

# Servo Amplifier Common Specifications

Pulse input Single-axis | EtherCAT Single-axis | EtherCAT Multi-axis

## Pulse input Single-axis

| | | |
|---|---|---|
| Control function | | Position control |
| Control system | | POWER-MOS-FET : PWM control sinusoidal drive |
| Main Circuit Power Supply | | 48 VDC±10%*1) |
| Control power | | 5 VDC±5%*2) |
| Environment | Ambient temperature | 0 to 40℃ *3) |
| | Storage temperature | −20 to +65℃ |
| | Operation/Storage humidity | Below 90%RH (no condensation) |
| | Elevation | 1000 m or lower |
| | Vibration | 4.9 m/s$^2$ freq. range 10 to 55 Hz in X, Y, and Z direction each, within 2 hours |
| | Shock | 19.6 m/s$^2$ |
| Structure | | External tray type DC power supply |
| Mass | | 0.25 kg |
| Frequency characteristics | | 1200 Hz (In high frequency sampling mode) |
| Speed control range | | 1:5000 (Internal speed command) |
| Protection functions | | Over current, Current detector error, Overload, Main circuit overvoltage, Main circuit power low voltage, Control circuit undervoltage, Encoder error, Over speed, Speed control error, Speed feedback error, CPU error, Memory error, Parameter error, Unreasonable position deviation, Position command pulse error, Amplifier overheating, External disorder |
| Display | | Alarm display (red), status display (green), control power ON (green) |
| Dynamic brake | | Built-in |
| Regenerative resistor | | Option |
| Analog monitor | | Option |

*1: Always use input voltage within the specificiation range for the main circuit power supply.
*2: The control power can be directly used as power source for the encoder. If the wiring to the encoder is long, the voltage may be reduced in the wiring, causing the encoder to not work properly even when the voltage is within the specified range.
*3: Use within the operating ambient temperature range.

## EtherCAT Single-axis | EtherCAT Multi-axis

| Servo amplifier type | | EtherCAT Single-axis | EtherCAT Multi-axis |
|---|---|---|---|
| Control function | | Position control/Speed control/Torque control (Parameter switching) | |
| Control system | | POWER-MOS-FET : PWM control sinusoidal drive | |
| Main Circuit Power Supply | | 48 VDC±10%*1) | |
| Control power | | 24 VDC±10%*1) | |
| Environment | Ambient temperature | 0 to 55℃ | |
| | Storage temperature | −20 to +65℃ | |
| | Operation/Storage humidity | Below 90%RH (no condensation) | |
| | Elevation | 1000 m or lower | |
| | Vibration | 4.9 m/s$^2$ freq. range 10 to 55 Hz in X, Y, and Z direction each, within 2 hours | |
| | Shock | 19.6 m/s$^2$ | |
| Structure | | External tray type DC power supply | |
| Mass | | 0.5 kg (Without regenerative resistor)<br>0.55 kg (With regenerative resistor) | RF2J24A0HL5: 0.75 kg<br>RF2K24A0HL5: 0.8 kg |
| Frequency characteristics | | 800 Hz | |
| Speed control range | | 1:5000 | |
| Protection functions | | Over current, Current detection error, Overload, Regeneration error, Overheating, External disorder, Over voltage, Main circuit power low voltage, Encoder error, Over speed, Speed control error, Speed feedback error, Unreasonable position deviation, Position command pulse error, Built-in memory error, Parameter error | |
| Display | | Status display, Monitor display, Alarm display, Parameter setting, Test run, Adjustment mode | Alarm display (red), status display (green), control power establishment (green), main circuit charge (red), communication link (green) × 2, communication RUN (green), communication Error (red) |
| Dynamic brake | | Built-in | No |
| Regenerative resistor | | Built-in | external type<br>(Connect to the CNC connector if a regenerative resistor is required.) |
| Analog monitor | | Option | No |

*1: Always use input voltage within the specificiation range for the main circuit power supply.

## Servo Amplifier Safety Standards

Pulse input Single-axis | EtherCAT Single-axis | EtherCAT Multi-axis

| Servo amplifier type | Safety standards | | |
|---|---|---|---|
| All models | North American safety standards (UL ratings) | UL508C | |
| | European directive | Low-voltage directive | EN61800-5-1 |
| | | EMC directive | EN61000-6-2<br>EN61800-3<br>EN61326-3-1（EtherCAT only） |
| | KC Mark (Korea Certification Mark) | KN61000-6-2, KN61000-6-4 | |
| Models with safety features | Safety feature standards | EtherCAT Single-axis | IEC61508：SIL2, ISO 13894-1 Cat3：PL=d, IEC62061：SILCL2 |
| | | EtherCAT Multi-axis | IEC61508：SIL3, ISO 13894-1 Cat3：PL=e, IEC62061：SILCL3 |

## EtherCAT interface specifications

EtherCAT Single-axis | EtherCAT Multi-axis

| | |
|---|---|
| Physical layer | IEC61158-2<br>IEEE802.3u 100BASE-TX |
| Data link layer | IEC61158-3, -4 Type12 |
| Application layer | IEC61158-5, -6 Type12 |
| Device profile | IEC61800-7 Profile type1 (CiA402)<br>·CoE (CANopen over EtherCAT)<br>·FoE (File access over EtherCAT) |
| Communication port | RJ45 connector (2 ports) |
| Bit rate | 100 Mbps (Full duplex) |
| Max. no. of nodes | 65535 nodes |
| Transmission distance/Topology | 100 m max. (between nodes)/Daisy-chain |
| Communication cable | Twisted-pair CAT5e (Straight or cross) |
| Communication objects | SDO (Service Data Object)<br>PDO (Process Data Object) |
| Synchronization types | SYNC0, SYNC1 event synchronization mode, asynchronous mode |
| Operation modes | Profile position mode, profile velocity mode, profile torque mode, homing mode, cycle sync position mode, cycle sync velocity mode, cycle sync torque mode |
| LED indicators | Port 0/1 link display, RUN display, error display |
| General purpose I/O | Single-axis EtherCAT: Input × 6 points, output × 2 points (8 points in total)<br>Multi-axis EtherCAT: Input × 8 points (total), output × 2 points/axis (8 points in total) |

# Servo Amplifier Dimensions [Unit : mm]

Pulse input Single-axis | EtherCAT Single-axis | EtherCAT Multi-axis

## Pulse input Single-axis

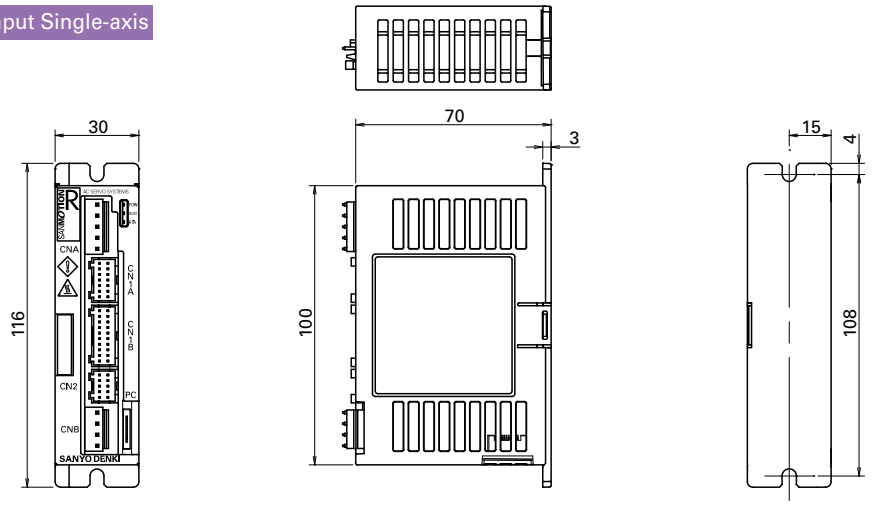


Mass: 0.25 kg

## EtherCAT Single-axis

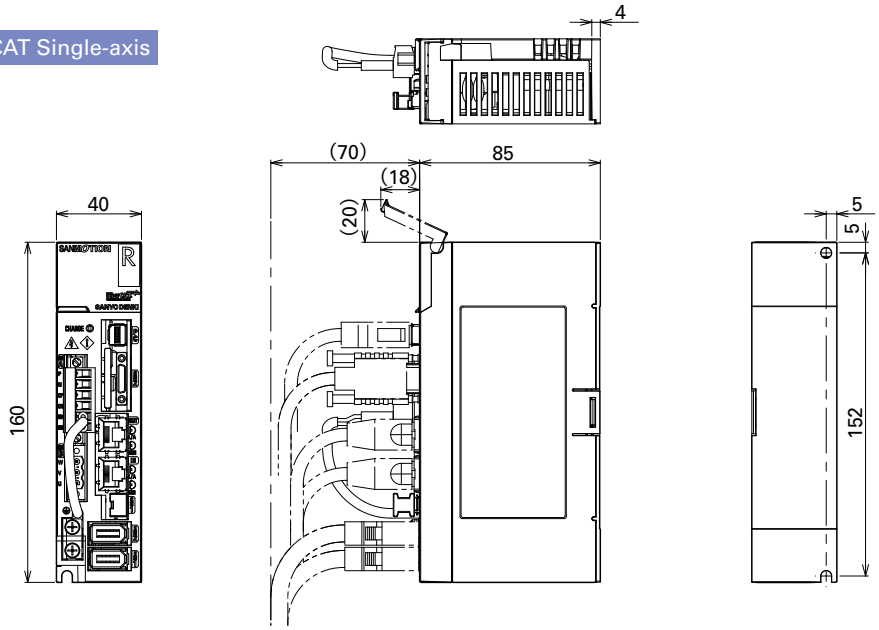


Mass
0.5 kg (Without regenerative resistor)
0.55 kg (With regenerative resistor)

## EtherCAT Multi-axis

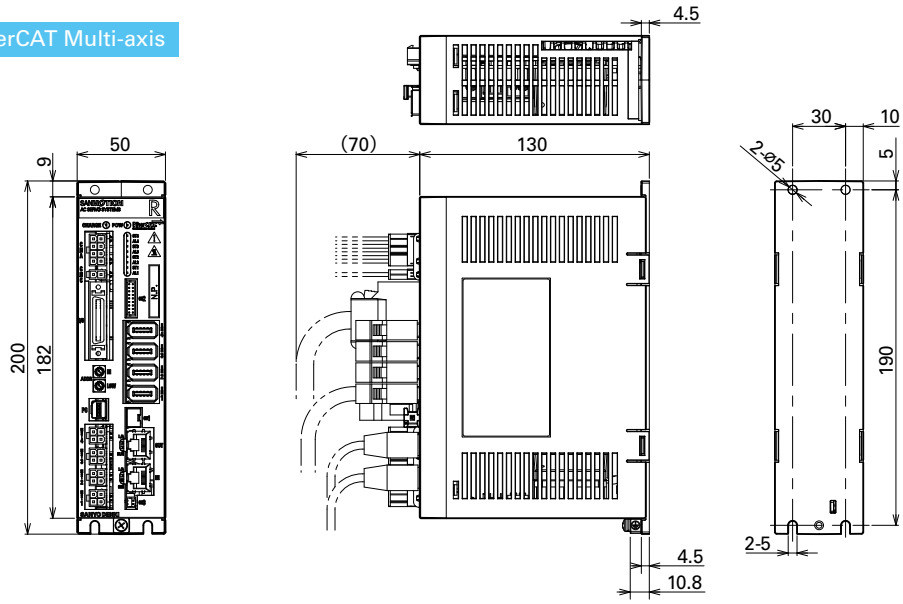


Mass
RF2J24A0HL5: 0.75 kg (Fanless)
RF2J24A0HL5: 0.8 kg (With fan)

## ■ Serial Encoder

Single-turn absolute encoder (MA018)
Battery-less optical absolute encoder (HA035)
Optical absolute encoder for incremental systems (PA035S)

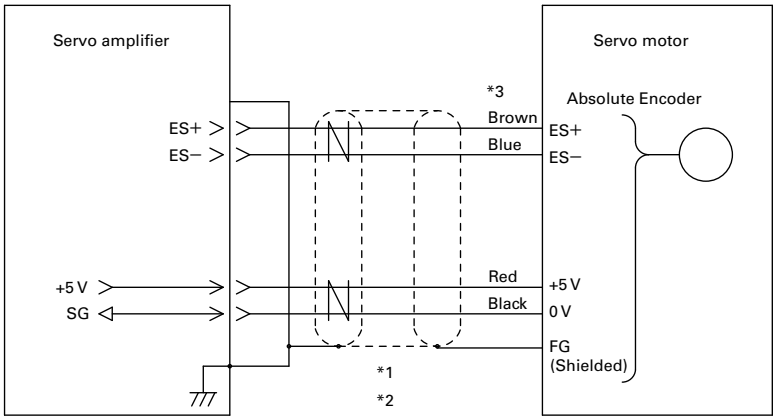


*1 Use a twisted pair shielded cable.
*2 Maximum cable lengths by conductor size of the power supply cable (5 V, SG)

| Conductor size | | Conductor resistance | Length |
|---|---|---|---|
| AWG | SQ (mm²) | (Ω/km) *20℃ | (m) |
| 26 | 0.15 | 150 or less | 4 |
| 24 | 0.2 | 100 or less | 6 |
| 22 | 0.3 | 60 or less | 10 |
| 20 | 0.5 | 40 or less | 15 |
| 18 | 0.75 | 25 or less | 25 |

Conductor resistance differs according to conductor specifications.

*3 Indicates the lead wire color.

Servo amplifier connector

| Servo amplifier | Connector symbol | Connector contact model no. | Servo amplifier connector pin no. | | | |
|---|---|---|---|---|---|---|
| | | | ES+ | ES- | +5 V | SG |
| Pulse input Single-axis | CN2 | Housing: PADP-10V-1-S<br>Contact: SPH-002GW-P0.5 | 3 | 4 | 1 | 2 |
| EtherCAT Single-axis | EN1, EN2 | Connector: 36210-0100PL<br>Shell kit: 36310-3200-008 | 7 | 8 | 1 | 2 |
| EtherCAT Multi-axis | EN1 to EN4 | | | | | |

## Servo Amplifier + R2 Servo motor High efficiency and low ripple (medium inertia) RoHS

| Servo amplifier model no. | Pulse input Single-axis | | | RF2G21A0A00《40A》 | | |
|---|---|---|---|---|---|---|
| | EtherCAT Single-axis | | | RS2K04A2HL5/RS2K04A2HA5《40A》 | | |
| | EtherCAT Multi-axis | | | RF2J24A0HL5(Up to 120 W in total for 4 axes)/RF2K24A0HL5(Up to 300 W in total for 4 axes)《40A》 | | |
| Servo motor model no.《 》indicates flange size | | | | R2GA02D20F《20 mm sq.》 | R2GA02D30F《20 mm sq.》 | R2GA04003F《40 mm sq.》 |
| | Status | Symbol | Unit | | | |
| Rated output | ★ | $P_R$ | W | 20 | 30 | 30 |
| Rated speed | ★ | $N_R$ | $min^{-1}$ | 3000 | 3000 | 3000 |
| Maximum speed | ★ | Nmax | $min^{-1}$ | 6000 | 6000 | 6000 |
| Rated torque | ★ | $T_R$ | N·m | 0.064 | 0.095 | 0.098 |
| Continuous stall torque | ★ | $T_S$ | N·m | 0.064 | 0.095 | 0.108 |
| Peak stall torque | ★ | $T_P$ | N·m | 0.23 | 0.38 | 0.24 |
| Rated armature current | ★ | $I_R$ | Arms | 1.8 | 2.6 | 1.9 |
| Armature stall current | ★ | $I_S$ | Arms | 1.8 | 2.6 | 2.0 |
| Peak armature stall current | ★ | $I_P$ | Arms | 6.0 | 9.6 | 4.8 |
| Torque constant | ☆ | $K_T$ | N·m/Arms | 0.0458 | 0.0487 | 0.0582 |
| Voltage constant for each phase | ☆ | $K_{E\phi}$ | $mV/min^{-1}$ | 1.60 | 1.70 | 2.03 |
| Phase resistance | ☆ | $R_\phi$ | Ω | 1.06 | 0.76 | 1 |
| Rated power rate | ★ | $Q_R$ | kW/s | 12.4 | 20 | 3.9 |
| Electrical time constant | ☆ | te | ms | 0.56 | 0.55 | 0.55 |
| Mechanical time constant (not including encoder) | ☆ | tm | ms | 0.50 | 0.44 | 2.2 |
| Rotor inertia | | $J_M$ | $\times10^{-4}kg\cdot m^2$ ($GD^2/4$) | 0.0033 | 0.0046 | 0.0247 |
| Absolute encoder inertia*1 | | $J_S$ | $\times10^{-4}kg\cdot m^2$ ($GD^2/4$) | 0.00021 | 0.00021 | 0.0042 |
| Servo motor mass*1 | | We | kg | 0.14 | 0.18 | 0.37 |
| Brake static friction torque | | Tb | N·m | - | - | 0.32 min. |
| Brake rated voltage | | Vb | V | - | - | 90 VDC/24 VDC ± 10% |
| Brake rated current | | Ib | A | - | - | 0.07/0.27 |
| Rotor moment of inertia (brake) | | Jb | $\times10^{-4}kg\cdot m^2$ ($GD^2/4$) | - | - | 0.0078 |
| Brake mass | | W | kg | - | - | 0.23 |
| CE and UL approved servo motors*4 | | | | No | No | Yes |
| Servo motor protection code | | | | IP40 | IP40 | IP65 |
| Size of aluminum plates for heat radiation during measurement | | | | 150 × 150 × 6 mm | 250 × 250 × 6 mm | 250 × 250 × 6 mm |
| Servo motor dimensions | | | | p. 24 | | |

*1 These values are for 20 mm sq. servo motor with absolute encoder [MA018], and 40 mm sq./60 mm sq. servo motor with battery-less absolute encoder [HA035].
For the servo amplifier mass, refer to p. 20.

*2 Items with ★ and speed - torque characteristics indicate values after temperature rise saturation when used with a standard servo amplifier. The values are the typical values.

*3 ☆ : Indicates a typical value when the winding temperature is 20°C. The values are the typical values.

*4 Our standard servo amplifiers are CE and UL approved.

## Speed-Torque Characteristics

| Servo motor model no. | | |
|---|---|---|
| R2GA02D20F | R2GA02D30F | R2GA04003F |

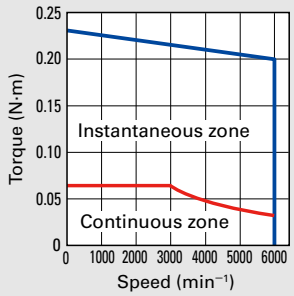


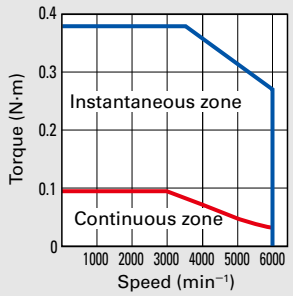


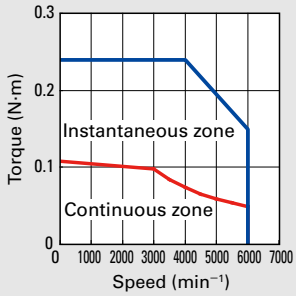


- These characteristics are for when the input voltage of the main power supply is 48 VDC and the distance between the servo amplifier and the servo motor is 2 m.
- In low voltage servo systems, the tendency for motor torque to decrease is more obvious than in 200 VAC servo systems due to narrow wiring diameter or long wiring distance between the servo amplifier and servo motor. Select a motor with higher acceleration, deceleration, and effective torque.

| RF2G21A0A00《40A》 | | | | Pulse input Single-axis | | | Servo amplifier model no. |
|---|---|---|---|---|---|---|---|
| RS2K04A2HL5/RS2K04A2HA5《40A》 | | | | EtherCAT Single-axis | | | |
| RF2K24A0HL5(Up to 300 W in total for 4 axes)《40A》 | | | | EtherCAT Multi-axis | | | |
| R2GA04005F《40 mm sq.》 | R2GA04008D《40 mm sq.》 | R2GA06010D《60 mm sq.》 | R2GA06020D《60 mm sq.》 | Servo motor model no.《 》indicates flange size | | | |
| | | | | Unit | Symbol | Status | |
| 50 | 80 | 100 | 200 | W | $P_R$ | ★ | Rated output |
| 3000 | 3000 | 3000 | 3000 | $min^{-1}$ | $N_R$ | ★ | Rated speed |
| 6000 | 5000 | 5000 | 4500 | $min^{-1}$ | Nmax | ★ | Maximum speed |
| 0.159 | 0.255 | 0.318 | 0.637 | N·m | $T_R$ | ★ | Rated torque |
| 0.167 | 0.255 | 0.353 | 0.637 | N·m | $T_S$ | ★ | Continuous stall torque |
| 0.54 | 0.86 | 0.84 | 1.5 | N·m | $T_P$ | ★ | Peak stall torque |
| 3.8 | 4.1 | 5.1 | 6 | Arms | $I_R$ | ★ | Rated armature current |
| 3.9 | 4.1 | 5.5 | 6 | Arms | $I_S$ | ★ | Armature stall current |
| 13.7 | 14.1 | 14.1 | 14.1 | Arms | $I_P$ | ★ | Peak armature stall current |
| 0.047 | 0.0693 | 0.0673 | 0.117 | N·m/Arms | $K_T$ | ☆ | Torque constant |
| 1.64 | 2.42 | 2.35 | 4.07 | $mV/min^{-1}$ | $K_{E\phi}$ | ☆ | Voltage constant for each phase |
| 0.33 | 0.32 | 0.19 | 0.19 | Ω | $R_\phi$ | ☆ | Phase resistance |
| 6.7 | 10 | 8.6 | 19 | kW/s | $Q_R$ | ★ | Rated power rate |
| 0.58 | 0.72 | 1.7 | 2.1 | ms | te | ☆ | Electrical time constant |
| 1.7 | 1.3 | 1.5 | 0.92 | ms | tm | ☆ | Mechanical time constant (not including encoder) |
| 0.0376 | 0.0627 | 0.117 | 0.219 | $\times10^{-4}kg\cdot m^2$ ($GD^2/4$) | $J_M$ | | Rotor inertia |
| 0.0042 | 0.0042 | 0.0042 | 0.0042 | $\times10^{-4}kg\cdot m^2$ ($GD^2/4$) | $J_S$ | | Absolute encoder inertia*1 |
| 0.41 | 0.53 | 0.74 | 0.99 | kg | We | | Servo motor mass*1 |
| 0.32 min. | 0.32 min. | 0.36 min. | 1.37 min. | N·m | Tb | | Brake static friction torque |
| 90 VDC/24 VDC ± 10% | | | | V | Vb | | Brake rated voltage |
| 0.07/0.27 | 0.07/0.27 | 0.07/0.27 | 0.11/0.32 | A | Ib | | Brake rated current |
| 0.0078 | 0.0078 | 0.06 | 0.06 | $\times10^{-4}kg\cdot m^2$ ($GD^2/4$) | Jb | | Rotor moment of inertia (brake) |
| 0.23 | 0.23 | 0.3 | 0.35 | kg | W | | Brake mass |
| Yes | | | | | | | CE and UL approved servo motors*4 |
| IP65 | | | | | | | Servo motor protection code |
| 250 × 250 × 6 mm | | | | | | | Size of aluminum plates for heat radiation during measurement |
| p. 24 | | | | | | | Servo motor dimensions |

Servo Motor Operating Ambient Conditions

| | |
|---|---|
| Operating temperature and humidity | Temp.: 0 to 40°C. Humidity: 90% max. (No condensation) |
| Vibration resistance | 24.5 $m/s^2$ |
| Shock resistance | 98 $m/s^2$, twice |
| Elevation | 1000 m or lower above sea level |
| Installation location | Indoor (without direct sunlight)<br>Location where no substance that gives adverse effects on the device and motor, such as corrosive gas, flammable gas, or dust exists |

Servo motor model no.

R2GA04005F

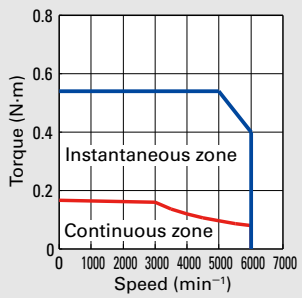


R2GA04008D

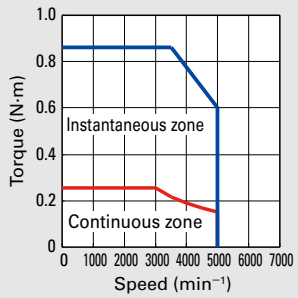


R2GA06010D

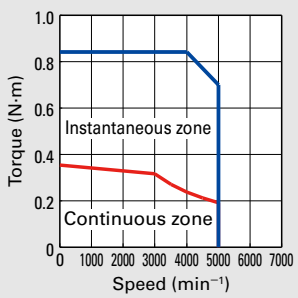


R2GA06020D

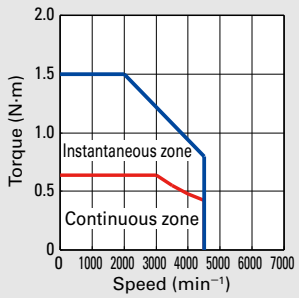

## 20 mm sq.

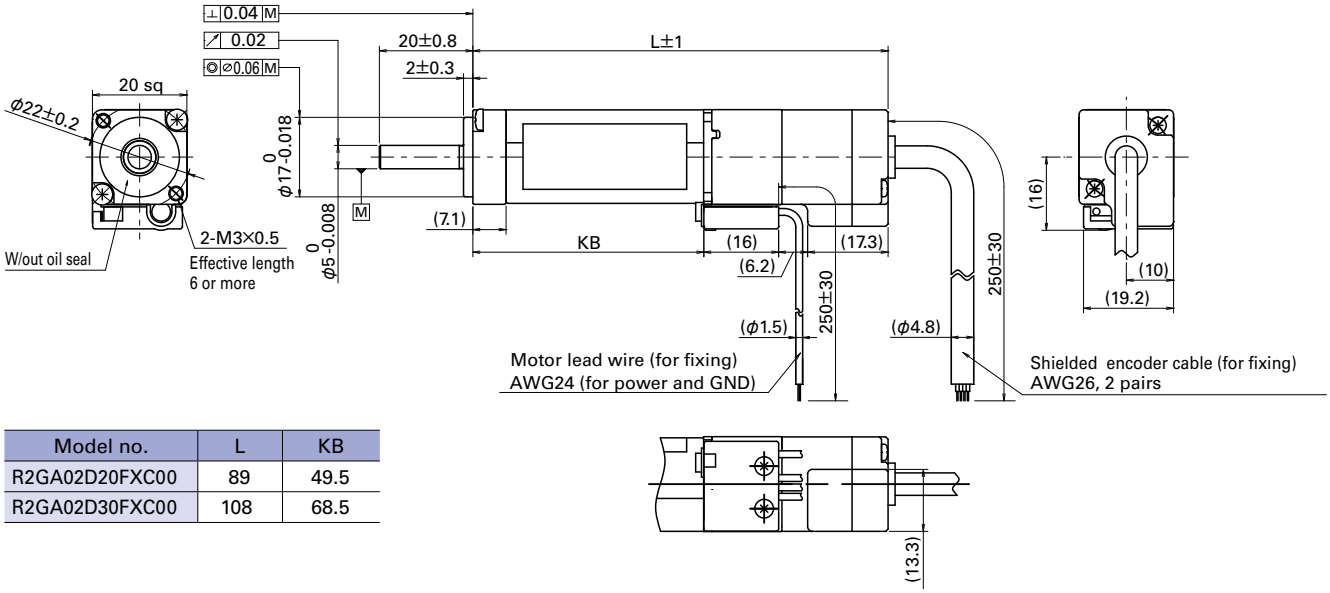


| Model no. | L | KB |
|---|---|---|
| R2GA02D20FXC00 | 89 | 49.5 |
| R2GA02D30FXC00 | 108 | 68.5 |

## 40 mm sq. to 60 mm sq.

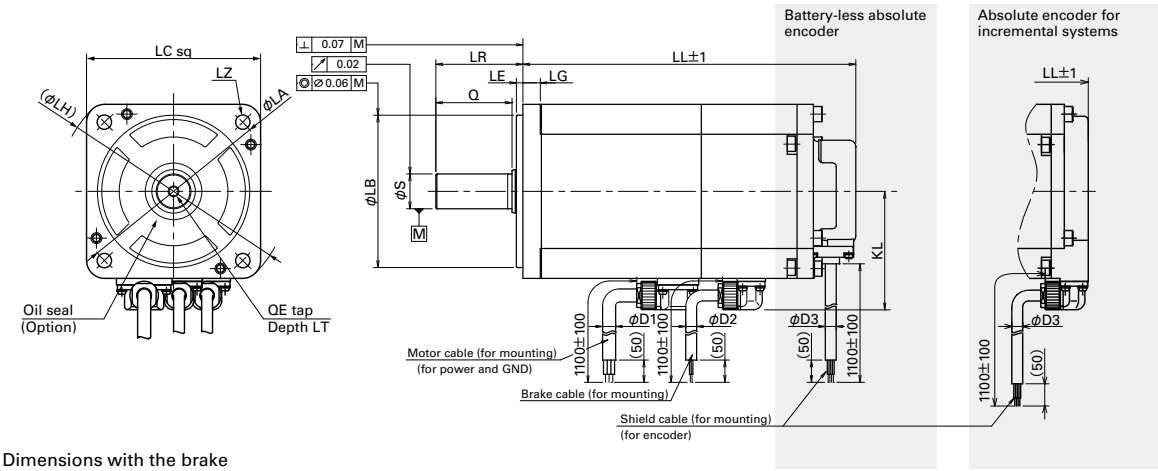


Dimensions with the brake

| | Battery-less absolute encoder | | | | Absolute encoder for incremental systems | | | |
|---|---|---|---|---|---|---|---|---|
| | W/out oil seal | | With oil seal | | W/out oil seal | | With oil seal | |
| | W/out brake | With brake | W/out brake | With brake | W/out brake | With brake | W/out brake | With brake |
| Model no. | LL | LL | LL | LL | LL | LL | LL | LL |
| R2GA04003 | 62.5 | 98.5 | 67.5 | 103.5 | 51.5 | 87.5 | 56.5 | 92.5 |
| R2GA04005 | 67.5 | 103.5 | 72.5 | 108.5 | 56.5 | 92.5 | 61.5 | 97.5 |
| R2GA04008 | 83.0 | 119.0 | 88.0 | 124.0 | 72 | 108 | 77 | 113 |
| R2GA06010 | 68.5 | 92.5 | 75.5 | 99.5 | 58.5 | 82.5 | 65.5 | 89.5 |
| R2GA06020 | 79.5 | 107.5 | 86.5 | 114.5 | 69.5 | 97.5 | 76.5 | 104.5 |

| Model no. | LG | KL | LA | LB | LE | LH | LC | LZ | LR | S | Q | QE | LT | D1 | D2 | D3 |
|---|---|---|---|---|---|---|---|---|---|---|---|---|---|---|---|---|
| R2GA04003 | 5 | 35.4 | 46 | 0<br>30-0.021 | 2.5 | 56 | 40 | 2- φ 4.5 | 25 | 0<br>6-0.008 | 20 | — | — | 6 | 5 | 5 |
| R2GA04005 | | | | | | | | | | 0<br>8-0.009 | | | | | | |
| R2GA04008 | | | | | | | | | | | | | | | | |
| R2GA06010 | 6 | 44.6 | 70 | 0<br>50-0.025 | 3 | 82 | 60 | 4- φ 5.5 | 25 | 0<br>8-0.009 | | — | — | | | |
| R2GA06020 | | | | | | | | | 30 | 0<br>14-0.011 | 25 | M5 | 12 | | | |

## ■Regenerative unit

Depending on the operating conditions of a servo system, a regenerative unit may be necessary to absorb voltage increases.

| | | |
|---|---|---|
| Model no. | | RF1BB00 |
| Power supply | | Operated by main circuit power supply (48 VDC) |
| Regenerative operation | Regenerative starting voltage | 55 V±1.5 V |
| | Hysteresis width | 2 V±0.5 V |
| | Internal regenerative resistance value | 15Ω±5% |
| | Allowable absorbed power of internal regenerative resistance | 7 W |
| Environment | Ambient temperature | 0 to 40℃ |
| | Storage temperature | −20 to +65℃ |
| | Operation/Storage humidity | Below 90%RH (no condensation) |
| | Elevation | 1000 m or lower |
| | Vibration | 4.9 m/s² freq. range 10 to 55 Hz in X, Y, and Z direction each, within 2 hours |
| | Shock | 19.6 m/s² |
| Structure | | Tray-type |
| Mass | | 0.2 kg |
| Protection functions | | Resistive overheating detection (break contact signal output) with a built-in thermostat*1) |

*1 The customer is responsible for monitoring the signal and shutting off the servo motor upon alarm.

### Dimentions

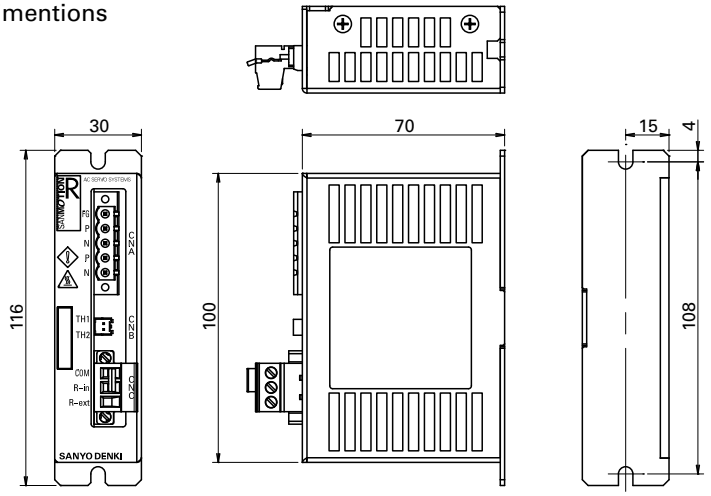


### Wiring diagram

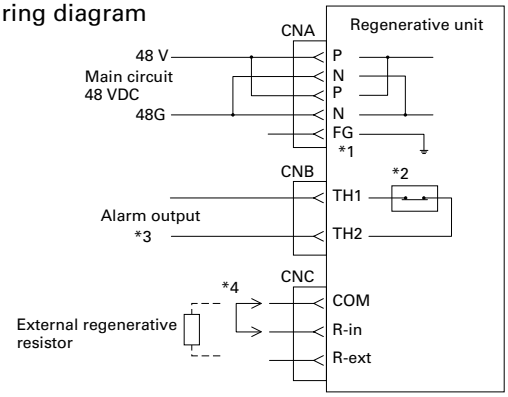


*1: There are two P terminals and two N terminals for CNA.
*2: This is a thermal guard for overheat detection.

| Specifications | |
|---|---|
| Contact format | Normally closed (break) |
| Max. switching voltage | 30 VDC |
| Max. switching current | 0.1 ADC |
| Max. switching power | 1 W |
| Min. switching current | 0.1 mA/1 VDC |

*3: The customer is responsible for handling the alarm output signal. If overheat is detected, stop the operation of servo motor and shut off the power supply to the main circuit.
*4: If regenerative power cannot be absorbed by the internal regenerative resistor, use an external regenerative resistor. In this case, remove the short bar between COM-R-in and install a resistor between COM-R-ext.

### Connector and cable

| | | | Model no. | Manufacturer | Manufacturer model no. | Housing | Contact |
|---|---|---|---|---|---|---|---|
| CNA | Power input | Connector | AL-00329461-01 | Phoenix Contact.K.K | MSTBT2.5/5-STF-5.08 | - | - |
| CNB | Alarm output | Cable with a connector | AL-00753589-01 | J.S.T. Mfg. Co.,Ltd. | - | PAP-02V-S | SPHD-001G-P0.5 |

· The regenerative unit comes with a connector for CNC.
· Alarm output cable (with connector)

## ■ PC cable Model no.: AL-00490833-01

Dimentions (Unit : mm)

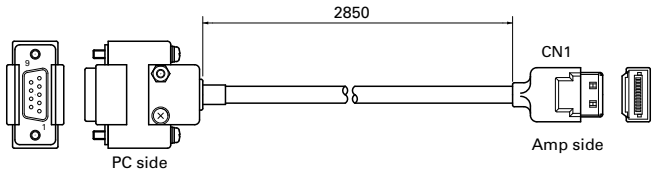


* Connect to a PC with an RS-232C serial cable

## ■ Power cable Model no.: AL-00745943-01

Dimentions (Unit : mm)

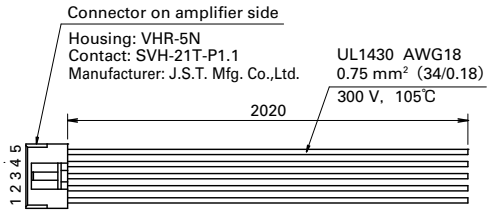


| Connector No. | Pin No. | Symbol | Name | Wire color |
|---|---|---|---|---|
| CNA | 1 | FG | Frame ground | Green |
| | 2 | 5 V | Control power 5 V | Yellow |
| | 3 | SG | Control power ground | Gray |
| | 4 | P | Main power supply 48 VDC | Red |
| | 5 | N | Main power supply ground | Blue |

## ■ Motor power cable Model no.: AL-00745944-01

Dimentions (Unit : mm)

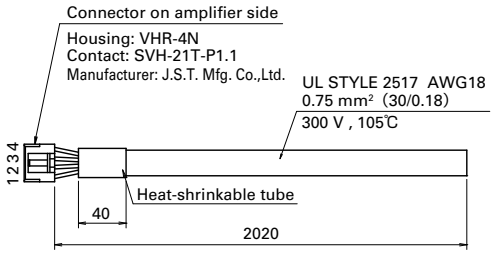


| Connector No. | Pin No. | Symbol | Name | Wire color |
|---|---|---|---|---|
| CNB | 1 | U | U phase | Red |
| | 2 | V | V phase | White |
| | 3 | W | W phase | Black |
| | 4 | FG | Frame ground | Yellow (Green) |

## ■ I/O cable set For CN1A (14 pin) and CN1B (20 pin). Model no.: AL-00745949-01

Dimentions (Unit : mm)

For CN1A

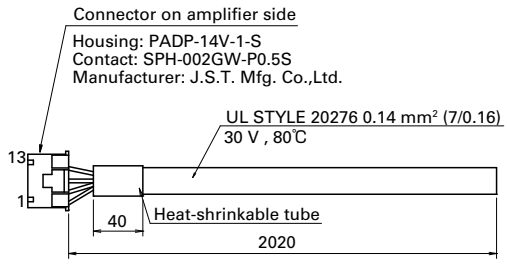


| Connector No. | Pin No. | Symbol | Wire color | Remarks |
|---|---|---|---|---|
| CN1A | 1 | AO | Blue | Twisted pair |
| | 3 | $\overline{AO}$ | White | |
| | 4 | BO | Green | Twisted pair |
| | 5 | $\overline{BO}$ | White | |
| | 6 | ZO | Yellow | Twisted pair |
| | 7 | $\overline{ZO}$ | White | |
| | 8 | PS | Red | Twisted pair |
| | 9 | $\overline{PS}$ | White | |
| | 11 | F-PC | Blue | Twisted pair |
| | 12 | $\overline{F\text{-}PC}$ | Brown | |
| | 13 | R-PC | Yellow | Twisted pair |
| | 14 | $\overline{R\text{-}PC}$ | Brown | |
| | 10 | SG | Purple | |
| | 2 | FG | Drain wire | |

For CN1B

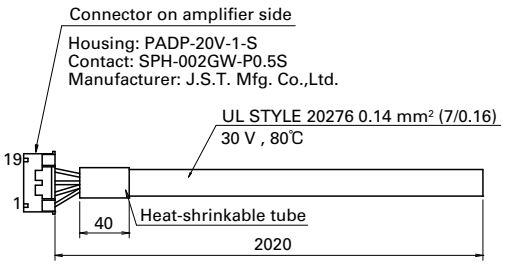


| Connector No. | Pin No. | Symbol | Wire color | Remarks |
|---|---|---|---|---|
| CN1B | 1 | IN-COM | Blue | |
| | 3 | CONT1 | Yellow | Twisted pair |
| | 4 | CONT2 | White | |
| | 5 | CONT3 | Green | Twisted pair |
| | 6 | CONT4 | White | |
| | 7 | CONT5 | Red | Twisted pair |
| | 8 | CONT6 | White | |
| | 9 | CONT7 | Purple | Twisted pair |
| | 10 | CONT8 | White | |
| | 11 | OUT-PWR | Blue | Twisted pair |
| | 19 | OUT-COM | Brown | |
| | 12 | OUT1 | Yellow | Twisted pair |
| | 13 | OUT2 | Brown | |
| | 14 | OUT3 | Green | Twisted pair |
| | 15 | OUT4 | Brown | |
| | 16 | OUT5 | Red | Twisted pair |
| | 17 | OUT6 | Brown | |
| | 18 | OUT7 | Purple | Twisted pair |
| | 20 | OUT8 | Brown | |
| | 2 | FG | Drain wire | |

## ■ Serial encoder cable

Model no.: AL-00745946-01

Dimentions (Unit : mm)

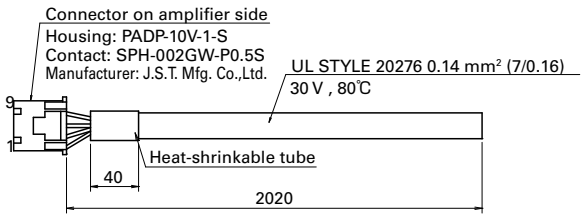


| Connector No. | Pin No. | Symbol | Wire color | Remarks |
|---|---|---|---|---|
| CN2 | 1 | +5 V | Red | Twisted pair |
| | 2 | SG | White | |
| | 3 | ES+ | Blue | Twisted pair |
| | 4 | ES- | White | |
| | 5 | BAT+ | Yellow | Twisted pair |
| | 6 | BAT- | White | |
| | 7 | | | |
| | 8 | | | |
| | 9 | | | |
| | 10 | FG | Drain wire | Shielded |

Pins 5 and 6 are not used with encoders in this catalog.

## ■ Analog monitor box

This is used to monitor operation waveforms of servo amplifier with a measuring equipment.

| | |
|---|---|
| Model no. | Q-MON-5 |
| Power supply | ±12 V±5% , external supply (Power source should be arranged by the customer.) |
| Monitor channel | Analog × 2 CH, digital × 2 CH, signal is to be selected according to setup software. |
| Output voltage range, output error | ±8 VDC max, within ±20% |
| Offset voltage | within ±100 mV |
| Output resistance | 1 kΩ |
| Load | within 2 mA |

A cable for connecting the servo amplifier and analog monitor box (2 m) and a power cable are supplied.

Dimentions (Unit : mm)

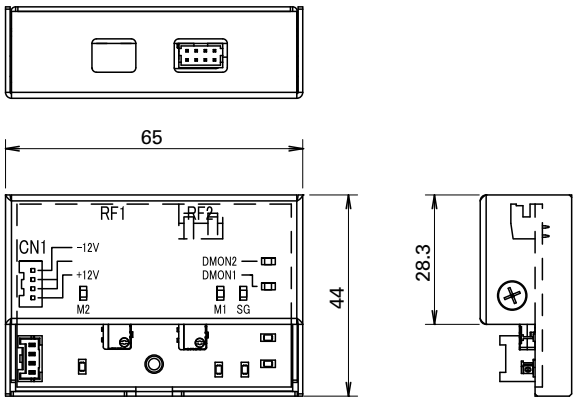


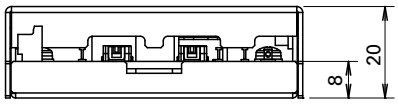


Power cable

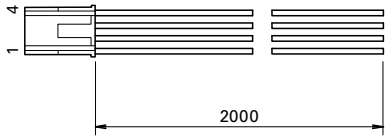


| Connector No. | Pin No. | Color | Definition |
|---|---|---|---|
| CN1 | 1 | Red | +12 V |
| | 2 | Black | SG |
| | 3 | Black | SG |
| | 4 | Blue | -12 V |

## ■ PC cable Model no.: AL-00689703-01 (same cable as for EtherCAT multi-axis)

Dimentions (Unit : mm)

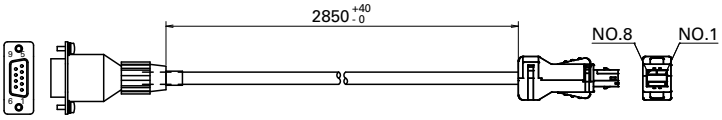


PC side Amplifier side

## ■ Serial encoder cable (same cable as for EtherCAT multi-axis)

| Model no. | Cable length (L) |
|---|---|
| AL-00921370-01 | 3 m |
| AL-00921370-02 | 5 m |
| AL-00921370-03 | 10 m |

Dimentions (Unit : mm)

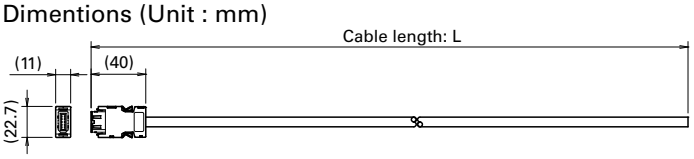


Servo amplifier side Encoder side

| Connector No. | Pin No. | Symbol | Wire color | Remarks |
|---|---|---|---|---|
| EN1 | 1 | +5 V | Red | |
| | 2 | SG | Black | |
| | 7 | ES+ | Brown | |
| | 8 | ES- | Blue | |
| | 9 | BAT+ | Green | |
| | 10 | BAT- | Purple | |
| | Shell | Ground | | Shielded |

The pin No. 9 and 10 are not used for the encoder in this catalog.

## ■ Analog monitor box

Monitors operating waveform of a servo amplifier using measuring equipment.

| Model no. | Q-MON-3 |
|---|---|

Two dedicated cables for connecting the servo amplifier and analog monitor box (model no: AL-00690525-01) are supplied.

Dimentions (Unit : mm)

1) Monitor box (model no. : Q-MON-3)

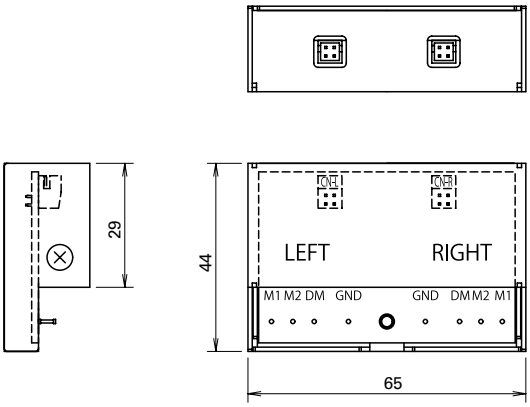


2) Dedicated cable (model no. : AL-00690525-01)

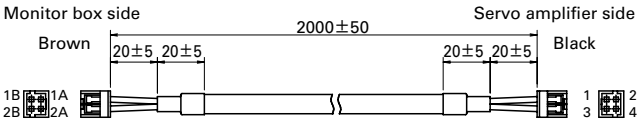

## ■ PC cable Model no.: AL-00689703-01 (same cable as for EtherCAT single-axis.)

Dimentions→ p.28

## ■ Power cable Model no.: AL-00921367-01

Dimentions (Unit : mm)

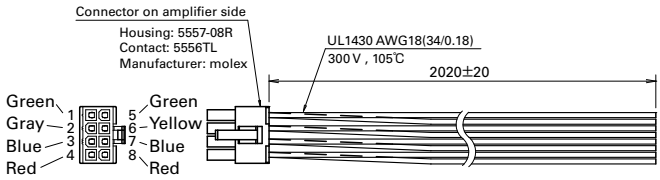


| Connector No. | Pin No. | Symbol | Wire color |
|---|---|---|---|
| CNA | 1 | FG | Green |
| | 2 | CN | Gray |
| | 3 | N | Blue |
| | 4 | P | Red |
| | 5 | FG | Green |
| | 6 | CP | Yellow |
| | 7 | N | Blue |
| | 8 | P | Red |

## ■ Regenerative resistor connection cable Model no.: AL-00921368-01

Dimentions (Unit : mm)

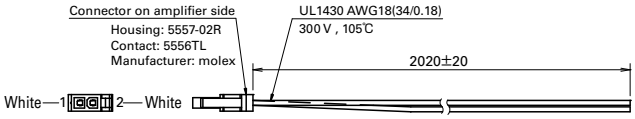


| Connector No. | Pin No. | Symbol | Wire color |
|---|---|---|---|
| CNC | 1 | RB1 | White |
| | 2 | RB2 | White |

## ■ Motor power cable

| Model no. | Cable length (L) |
|---|---|
| AL-00921369-01 | 3 m |
| AL-00921369-02 | 5 m |
| AL-00921369-03 | 10 m |

Dimentions (Unit : mm)

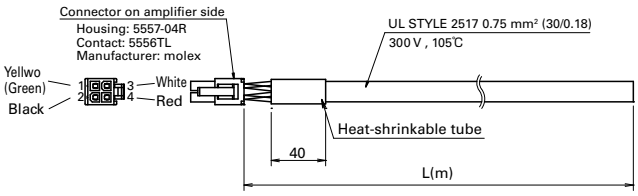


| Connector No. | Pin No. | Symbol | Wire color |
|---|---|---|---|
| MOT1 to MOT4 | 1 | FG | Yellow (Green) |
| | 2 | W | Black |
| | 3 | V | White |
| | 4 | U | Red |

## ■ Serial encoder cable (same cable as for EtherCAT single-axis.)

Dimentions→ p.28

| Model no. | Cable length (L) |
|---|---|
| AL-00921370-01 | 3 m |
| AL-00921370-02 | 5 m |
| AL-00921370-03 | 10 m |

## ■ Side mounting bracket Model no. : AL-00921371-01

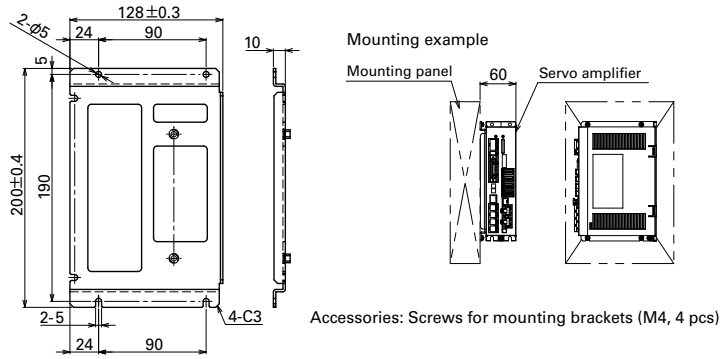


Accessories: Screws for mounting brackets (M4, 4 pcs)

Mass: 0.3 kg

## ■ External regenerative resistor

Use this external regenerative resistor if regenerative power cannot be absorbed with the internal regenerative resistor.

Model no. : REGIST-080W50B

Pulse input Single-axis EtherCAT Single-axis EtherCAT Multi-axis

Dimentions (Unit : mm)

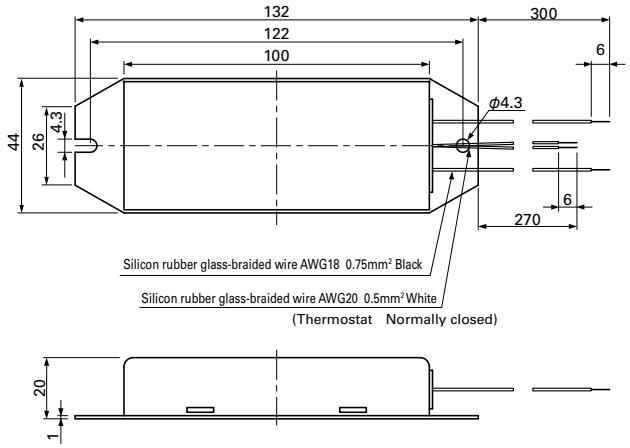


Mass: 0.19 kg

Model no. : REGIST-120W50B

Pulse input Single-axis EtherCAT Single-axis EtherCAT Multi-axis

Dimentions (Unit : mm)

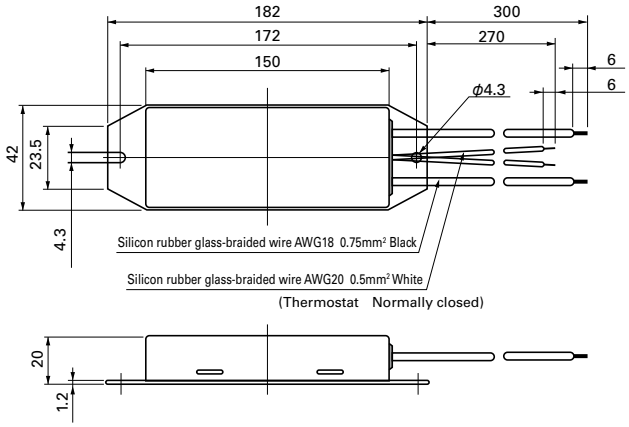


Mass: 0.24 kg

Model no. : REGIST-220W50B Pulse input Single-axis EtherCAT Single-axis

REGIST-220W20B EtherCAT Multi-axis

Dimentions (Unit : mm)

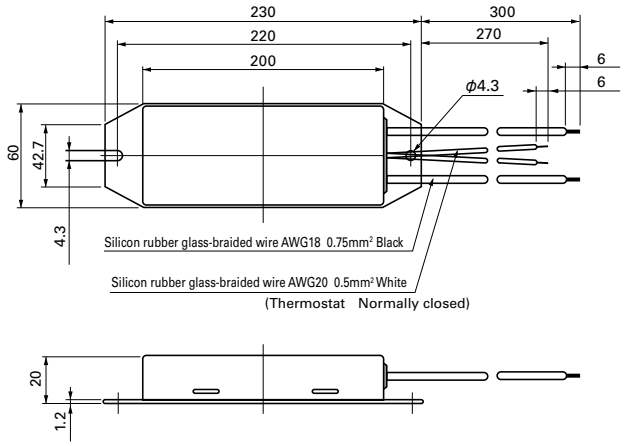


Mass: 0.44 kg

## ■ Servo motor capacity selection

This is a method of calculating the required capacity of servo motors from the mechanical specifications.
Here we have introduced the basic selection procedure focusing on a ball screw (flat) mechanism.

### Selection procedure

**1. Creation of operation patterns**

Create the operation patterns.

**2. Calculation of conversion of motor shaft moment of load inertia $J_L$**

Calculate the moment of load inertia from the machine configuration.

**3. Calculation of load torque $T_L$ for motor shaft conversion**

Calculate the load torque from the machine configuration.

**4. Provisional selection of servo motor capacity**

Provisionally select a motor in which the load moment of inertia ($J_L$) is 10 times or less than the rotor moment of inertia ($J_M$) of servo motor, while the load torque ($T_L$) is 80% or less ($T_R$ x 0.8) of rated torque of motor ($T_R$).

$J_L \leqq J_M \times 10$

$T_L \leqq T_R \times 0.8$

**5. Calculation of acceleration/deceleration torque**

Calculate the required acceleration/deceleration torque from the operation patterns.

**6. Calculation of effective torque**

Calculate the effective torque from the torque patterns.

**7. Judgment**

Determine whether the acceleration/deceleration torque ($T_a$, $T_b$) is 80% or less ($T_p$ x 0.8) of peak stall torque ($T_p$) of servo motor, and the effective torque (Trms) is 80% or less ($T_R$ x 0.8) of rating torque ($T_R$) of servo motor.

$T_a \leqq T_p \times 0.8$

$T_b \leqq T_p \times 0.8$

$Trms \leqq T_R \times 0.8$

If the judgment results cannot be applied in the aforementioned equation, reconsider the servo motor capacity, for example increasing the capacity.

**8. Calculation of regenerative power**

Calculate the regenerative power and select an external regenerative resistor if necessary.

### 1. Creation of operation patterns

First, determine the equipment mechanism, dimensions of all parts, positioning amount, positioning time, gear ratio, etc. An operation pattern is the determined driving force plotted on the speed/time axis.

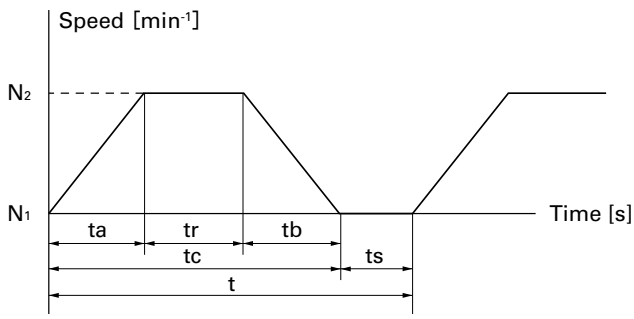


ta = Acceleration time[s]
tb = Deceleration time[s]
tr = Constant speed-time[s]
ts = Downtime[s]
t = 1 cycle[s]

### 2. Calculation of conversion of motor shaft moment of load inertia $J_L$

Load moment of inertia is the quantity showing inertia of a rotating object.
Given below is the calculation method used in case of ball screw (flat) mechanism.

■ Ball screw moment of inertia

$$J_{L1} = \left(\frac{1}{G}\right)^2 \times \frac{\pi \times \rho \times D^4 \times L}{32} \quad [kg \cdot m^2]$$

G: Gear ratio
$\rho$ : Ball screw specific gravity [kg/m$^3$] [Iron: 7.8 × 10$^3$]
D: Ball screw diameter [m]
L: Ball screw length [m]

■ Work + table moment of inertia

$$J_{L2} = \left(\frac{1}{G}\right)^2 \times W \times \left(\frac{P}{2\pi}\right)^2 \quad [kg \cdot m^2]$$

G: Gear ratio
W: Work + table mass [kg]
P: Ball screw pitch [m]

■ Conversion of motor shaft moment of load inertia.

$J_L = J_{L1} + J_{L2}$

* Moments of inertia of reducer and coupling are assumed to be negligible and have therefore been omitted.

## 3. Calculation of load torque $T_L$ for motor shaft conversion

Load torque is the power generated from the friction of the driving part or from the gravity that is converted on the motor shaft. When activated, this torque always acts as the load. Given below is the calculation method used in the case of a ball screw (flat) mechanism.

$$T_L = \frac{(F+\mu W)}{\eta} \times \frac{P}{2\pi} \times \frac{1}{G} \times 9.8 \quad [N \cdot m]$$

F: External force [kg]
$\eta$ : Machine efficiency
$\mu$ : Coefficient of friction
W: Work + table mass [kg]
P: Ball screw pitch [m]
G: Gear ratio

## 4. Provisional selection of servo motor capacity

Provisionally select the motors that apply to the following 2 conditions.

- Load moment of inertia ($J_L$) calculated in step 2 is 10 times or less than the rotor moment of inertia ($J_M$) of servo motor
  $J_L \leqq J_M \times 10$
- Load torque ($T_L$) calculated in step 3 is 80% or less ($T_R \times 0.8$) of rated torque ($T_R$) of servo motor
  $T_L \leqq T_R \times 0.8$

## 5. Calculation of acceleration/deceleration torque

Acceleration/deceleration torque is necessary for accelerating and decelerating the motor and load.

■ Method of obtaining acceleration torque ($T_a$)

$$T_a = \frac{2\pi(N_2 - N_1) \times (J_L + J_M)}{60 \times ta} + T_L \quad [N \cdot m]$$

$N_2$: Servo motor rotary speed after acceleration [$min^{-1}$]
$N_1$: Servo motor rotary speed before acceleration [$min^{-1}$]
$J_L$: Conversion of motor shaft moment of load inertia [$kg \cdot m^2$]
$J_M$: Conversion of servo motor moment of rotor inertia [$kg \cdot m^2$]
$T_L$: Calculation of load torque for motor shaft conversion [N · m]
ta: Acceleration time [s]

■ Method of obtaining deceleration torque ($T_b$)

$$T_b = \frac{2\pi(N_2 - N_1) \times (J_L + J_M)}{60 \times tb} - T_L \quad [N \cdot m]$$

$N_2$: Servo motor rotary speed before deceleration [$min^{-1}$]
$N_1$: Servo motor rotary speed after deceleration [$min^{-1}$]
$J_L$: Conversion of motor shaft moment of load inertia [$kg \cdot m^2$]
$J_M$: Conversion of servo motor moment of rotor inertia [$kg \cdot m^2$]
$T_L$ : Calculation of load torque for motor shaft conversion [N · m]
tb: Deceleration time [s]

## 6. Calculation of effective torque

Effective torque is the value per unit time obtained from root mean square of load torque / acceleration torque / deceleration torque .

$$Trms = \sqrt{\frac{(T_a^2 \times ta) + (T_L^2 \times tr) + (T_b^2 \times tb)}{t}} \quad [N \cdot m]$$

## 7. Judgment

Our company's judgment criteria are as follows.

- Load torque load factor $T_L \leqq T_R \times 0.8$
  (Load torque is 80% or less of rated torque)
- Acceleration torque load factor $T_a \leqq T_P \times 0.8$
  (Acceleration torque is 80% or less of peak stall torque)
  $T_P$: Peak stall torque
- Deceleration torque load factor $T_b \leqq T_P \times 0.8$
  (Deceleration torque is 80% or less of peak torque at stall)
  $T_P$: Peak stall torque
- Effective torque load factor $Trms \leqq T_R \times 0.8$
  (Effective torque is 80% less than rated torque)
- Moment of inertia ratio $J_L \leqq J_M \times 10$
  (Load moment of inertia is 10 times or less than the rotor moment of inertia of motor)

Rise in motor temperature can be suppressed by keeping a large margin in torque load factor. The moment of inertia ratio can be controlled at 10 times or more, for example, by slowly rotating the table mechanism. Testing with an actual machine is recommended.

## 8. Calculation of regenerative power

Calculate the regenerative efficient power (PM) to determine the regenerative resistor to be used. From the calculation results, determine whether an internal regenerative resistor can be used.

■ Method of obtaining regenerative efficient power (PM) of horizontal drive shaft
Derive the regenerative energy.

$$EM = Ehb = \frac{1}{2} \times N \times 3 \times Ke\phi \times \frac{Tb}{KT} \times tb - \left(\frac{Tb}{KT}\right)^2 \times 3 \times R\phi \times tb$$

EM: Regenerative energy in case of horizontal drive shaft [J]
Ehb: Regenerative energy during deceleration [J]
Ke $\phi$ : Induced voltage constant [$Vrms/min^{-1}$] (motor constant)
KT: Torque constant [N · m/Arms] (motor constant)
N: Motor rotary speed [$min^{-1}$]
R $\phi$ : Armature resistance [ Ω ] (motor constant)
tb: Deceleration time [s]
$T_b$: Deceleration torque [N · m]

Derive the regenerative efficient power from regenerative energy.

$$PM = \frac{EM}{t}$$

PM: Regenerative efficient power [W]
EM: Regenerative energy [J]
t: Cycle time [s]

■ Selection of regenerative resistor
Select a regenerative resistor that meets the following conditions.

- In case of servo amplifiers with an internal regenerative resistor:
  Permissible regenerative power [PR] that is less than efficient regenerative power [PM] and can be used with internal regenerative resistors
- In case of external regenerative resistor:
  Permissible regenerative power [PRO] that is less than efficient regenerative power [PM] and can be used with external regenerative resistors

Note that we have servo amplifier models both with and without internal regenerative resistors for absorbing regenerative power. Select the model accordingly.

## ■ Selection data for each mechanism

Typical examples of mechanisms and items that require selection are shown below. Provide this information when placing an order.

### Ball screw

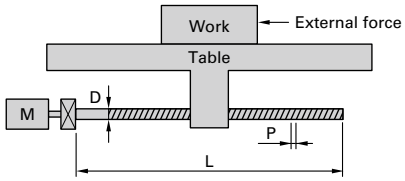


| | | |
|---|---|---|
| External force | F | N |
| Work + table mass | W | kg |
| Ball screw diameter | D | m |
| Ball screw length | L | m |
| Ball screw lead | P | m |
| Ball screw material specific gravity | $\rho$ | kg/m$^3$ |
| Coefficient of friction | $\mu$ | |
| Gear ratio * | G | |
| Machine efficiency | $\eta$ | |

### Rack & pinion

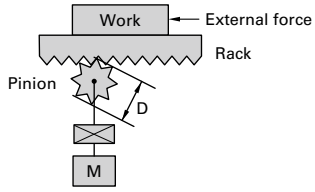


| | | |
|---|---|---|
| External force | F | N |
| Work + rack mass | W | kg |
| Pinion diameter | D | m |
| Pinion thickness | L | m |
| Pinion material specific gravit | $\rho$ | kg/m$^3$ |
| Coefficient of friction | $\mu$ | |
| Gear ratio * | G | |
| Machine efficiency | $\eta$ | |

### Belt drive

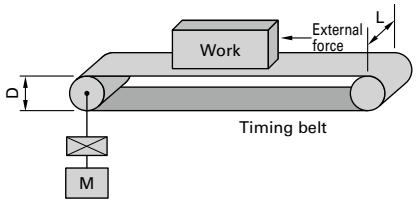


| | | |
|---|---|---|
| External force | F | N |
| Work + belt mass | W | kg |
| Pulley diameter | D | m |
| Pulley width | L | m |
| Pulley material specific gravity | $\rho$ | kg/m$^3$ |
| Pulley moment of inertia | J | kg · m$^2$ |
| Gear ratio * | G | |
| Machine efficiency | $\eta$ | |

### Roll feed

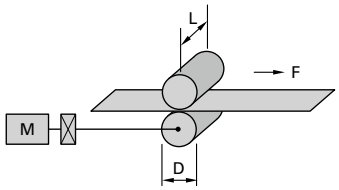


| | | |
|---|---|---|
| Sheet tension | F | N |
| Roll diameter | D | m |
| Roll width | L | m |
| Roll material specific gravity | $\rho$ | kg/m$^3$ |
| Roll moment of inertia | J | kg · m$^2$ |
| Gear ratio * | G | |
| Machine efficiency | $\eta$ | |

### Rotary table

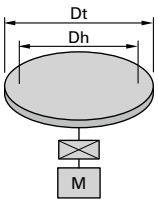


| | | |
|---|---|---|
| Table mass | W | kg |
| Table diameter | Dt | m |
| Table support diameter | Dh | m |
| Table moment of inertia | J | kg · m$^2$ |
| Support part coefficient of friction | $\mu$ | |
| Gear ratio * | G | |
| Machine efficiency | $\eta$ | |

* Derivation of gear ratio (G)

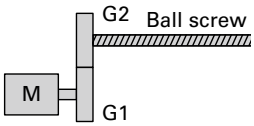


$$G = \frac{\text{Ball screw gear teeth (G2)}}{\text{Motor gear teeth (G1)}}$$

## Notes before Purchase

The products in this catalog are designed to be used with general industrial devices.
Always follow the following precautions.

- Read the accompanying Instruction Manual carefully prior to using the product.
- If applying to medical devices and other equipment affecting people's lives, please contact us beforehand and take appropriate safety measures.
- If applying to equipment that can have significant effects on society and the general public, please contact us beforehand.
- Do not use this product in an environment where vibration is present, such as in a moving vehicle or shipping vessel.
- Do not perform any retrofitting, re-engineering, or modification to this equipment.
- The products presented in this catalog are meant to be used for general industrial applications. If using for special applications related to aviation and space, nuclear power, electric power, submarine repeaters, and the like, please contact us beforehand.


**https://www.sanyodenki.com**

**SANYO DENKI CO., LTD.**
3-33-1 Minami-Otsuka, Toshima-ku, Tokyo 170-8451, Japan
TEL: +81 3 5927 1020

**SANYO DENKI** *EUROPE SA.*
P.A. Paris Nord Ⅱ, 48 Allée des Erables-VILLEPINTE, BP.57286, F-95958 ROISSY CDG Cedex, France
TEL: +33 1 48 63 26 61

**SANYO DENKI** *AMERICA,INC.*
468 Amapola Avenue Torrance, CA 90501, U.S.A.
TEL: +1 310 783 5400

**SANYO DENKI** *SHANGHAI CO., LTD.*
Room 2106-2110, Bldg A, Far East International Plaza, No.319, Xianxia Road, Shanghai, 200051, China
TEL: +86 21 6235 1107

**Beijing Branch**
Room1222, Tower B, Beijing COFCO Plaza, No.8 Jianguomennei Dajie, Dong Cheng District, Beijing 100005 China
TEL: +86 10 6522 2160

**SANYO DENKI** *(H.K.)CO., LIMITED*
Room 2305, 23/F, South Tower, Concordia Plaza, 1 Science Museum Road, TST East, Kowloon, Hong Kong
TEL: +852 2312 6250

**SANYO DENKI** *TAIWAN CO., LTD.*
N-711, 7F, Chia Hsin 2nd Bldg., No.96, Sec.2, Zhongshan N. Rd., Taipei 10449, Taiwan
TEL: +886 2 2511 3938

**SANYO DENKI** *SINGAPORE PTE. LTD.*
988 Toa Payoh North, #04-08, Singapore 319002
TEL: +65 6223 1071

**Indonesia Representative Office**
Summitmas II 4th Floor, Jl. Jend. Sudirman Kav.61-62, Jakarta 12190, Indonesia
TEL: + 62 21 252 3202

**SANYO DENKI** *GERMANY GmbH*
Frankfurter Strasse 80-82, 65760 Eschborn, Germany
TEL: +49 6196 76113 0

**SANYO DENKI** *KOREA CO., LTD.*
15F, KDB Building, 372, Hangang-daero, Yongsan-gu, Seoul, 04323, Korea
TEL: +82 2 773 5623

**Busan Branch**
8F, CJ Korea Express Bldg., 119, Daegyo-ro, Jung-gu, Busan, 48943, Korea
TEL: +82 51 796 5151

**SANYO DENKI** *(Shenzhen)CO., LTD.*
2F 02-11, Shenzhen International Chamber of Commerce Tower, No.168 Fuhua 3 Road, Futian District, Shenzhen, 518048 China
TEL: +86 755 3337 3868

**Tianjin Branch**
Room AB 16th Floor TEDA Building, No. 256 Jie Fang Nan Road, Hexi District, Tianjin 300042 China
TEL: +86 22 2320 1186

**Chengdu Branch**
Room2105B, Block A, Times Plaza, 2 Zongfu Road, Jinjiang District, Chengdu, 610016 China
TEL: +86 28 8661 6901

**SANYO DENKI** *(THAILAND)CO., LTD.*
388 Exchange Tower, 25th Floor, Unit 2501-1, Sukhumvit Road, Klongtoey, Klongtoey, Bangkok 10110 Thailand
TEL: +66 2261 8670

**SANYO DENKI** *INDIA PRIVATE LIMITED*
#14 (Old No.6/3), Avenue Road, Nungambakkam, Chennai - 600034, Tamil Nadu, India
TEL: +91 44 420 384 72





CATALOG No.S0940B011 '18.8