RK

2-pole solid state relays

Benefits

- **Space savings.** The RK series consists of two solid state relays contained in one housing having a product width of 45 mm.
- **Fast installation.** The RK solid state relay is ready for mounting to panel chassis or heatsink as the backplate is equipped with a pre-attached thermal interface.
- **Easy wiring.** The RK..P models are equipped with a pluggable spring terminal for easy and fast wiring of control connections.
- **Low equipment downtime.** The output of each pole is protected against over-voltages with an integrated transil.
- **Long lifetime.** Wire bonding technology reduces thermal and mechanical stresses of the output chips allowing a larger number of operational cycles compared to other assembly technologies.
- **User friendly.** LED indication per pole for visual indication of control status.
- **Food & Beverage certification conformance.** The RK is certified for 100,000 cycle endurance test according to UL508.

Description

The RK series consists of 2-pole solid state relays contained in one housing with the possibility to control each pole independently (RKD2.. models) or both poles together (RK2.. models). Ratings for both versions go up to 600 VAC, 75 AAC per pole.

The RK..C models have control termination through a 2.54 mm pitch connector. Terminated cables to mate with the RK..C are available and have to be ordered separately. The RK..P models have control termination with a 5.08 mm pitch plug connector. In this case, the control plug is shipped with the solid state relay.

Applications

Plastic extrusion machines, thermoforming machines, blow moulding machines, coffee machines, electrical ovens, vending machines, soldering ovens, dryers, climatic chambers, air handling units, plastic sealing machines, shrink tunnels, etc.

Main features

- 2-pole AC solid state relay with either independent control for each pole or common control
- Zero cross or instant on switching
- 4-32 VDC control voltage

References

Order code

RK □ 2 □ □ D □ □ □

Enter the code option instead of □. Refer to the selection guide section for valid part numbers.

Code	Option	Description	Comments
RK	-	Solid State Relay (RK)	
□	D	Dual control (independent control for each pole)	
	-	Common control for the two poles	
2	-	2-pole	
□	A	Switching mode: zero cross (ZC)	
	B	Switching mode: instant on (IO)	For RK..60 only
□	23	Rated voltage: 230 VAC (24-265 VAC) 50/60 Hz	For RKD2A only
	60	Rated voltage: 600 VAC (42-660 VAC) 50/60 Hz	
D	-		
□	50	Rated current / pole (with heatsink): 50 AAC	
	51	Rated current / pole (with heatsink): 50 AAC high I^2t	For RK..A only
	75	Rated current / pole (with heatsink): 75 AAC	For RK..60 only
□	C	Control termination: 2.54 mm pitch connector pins	
	P	Control termination: 5.08 mm pitch plug connector	
□	X30	Bulk packaging	Optional

Selection guide: RKD2

Rated output voltage, Switching mode	Control voltage	Control termination	Rated operational current (I^2t)		
			50 AAC (1500 A^2s)	50 AAC (3000 A^2s)	75 AAC (9800 A^2s)
230 VAC, ZC	4-32 VDC	Connector pins Plug	**RKD2A23D50C** **RKD2A23D50P**	**RKD2A23D51C** **RKD2A23D51P**	- -
600 VAC, ZC	4-32 VDC	Connector pins Plug	**RKD2A60D50C** **RKD2A60D50P**	**RKD2A60D51C** **RKD2A60D51P**	**RKD2A60D75C** **RKD2A60D75P**
600 VAC, IO	4-32 VDC	Connector pins Plug	**RKD2B60D50C** **RKD2B60D50P**	- -	**RKD2B60D75C** **RKD2B60D75P**

Selection guide: RK2

Rated output voltage, Switching mode	Control voltage	Control termination	Rated operational current (I^2t)		
			50 AAC (1500 A^2s)	50 AAC (3000 A^2s)	75 AAC (9800 A^2s)
600 VAC, ZC	4-32 VDC	Connector pins Plug	**RK2A60D50C** **RK2A60D50P**	**RK2A60D51C** **RK2A60D51P**	**RK2A60D75C** **RK2A60D75P**
600 VAC, IO	4-32 VDC	Plug	**RK2B60D50P**	-	**RK2B60D75P**

Selection guide: RK2D..X30

Rated output voltage, Switching mode	Control voltage	Control termination	Rated operational current (I^2t)
			50 AAC (3000 A^2s)
600 VAC, ZC	4-32 VDC	Connector pins	**RKD2A60D50CX30**

Selection guide: RK2..X30

Rated output voltage, Switching mode	Control voltage	Control termination	Rated operational current (I^2t)
			50 AAC (3000 A^2s)
600 VAC, ZC	4-32 VDC	Connector pins	**RK2A60D50CX30**
		Plug	**RK2A60D50PX30**

Carlo Gavazzi compatible components

Description	Component code	Notes
Control plugs	RK4MT, RK2MT	Spring plugs for RK..P, packing qty.: 10 pcs.
Cables	RCK4-100-1 RCK2-100-1	Cable accessory for RK..C
Heatsinks	RHS	Heatsinks and fans
Screw kits	SRWKITM5X10MM	Packing qty.: 20 pcs.
Fork terminals	RM635FK, RM635FKP	Packing qty.: 10 pcs.
Touch protection covers	RKIP20	Packing qty.: 10 pcs.

Further reading

Information	Where to find it
Online heatsink selector tool	https://gavazziautomation.com/nsc/HQ/EN/solid_state_relays

Structure

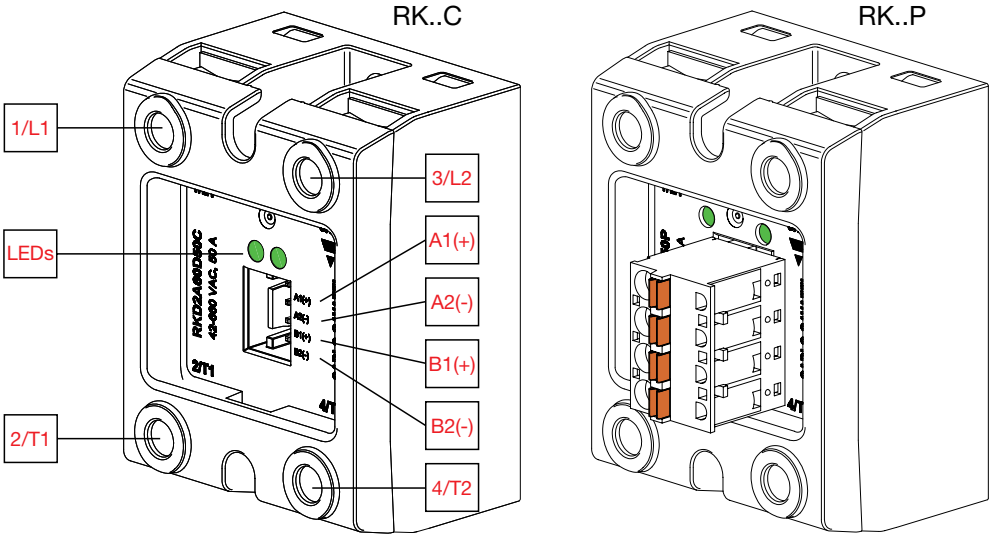

Element	Component	Function	
		RKD2	RK2
1/L1	Power connection	Mains connection for Pole A	
2/T1		Load connection for Pole A	
3/L2		Mains connection for Pole B	
4/T2		Load connection for Pole B	
A1(+)	Control connection	Control signal for Pole A	Control signal for Pole A & B
A2(-)		Ground for Pole A	Ground for Pole A & B
B1(+)		Control signal for Pole B	-
B2(-)		Ground for Pole B	-
LEDs	LED indicators	LED ON when control input is applied	

Features

General data

Material	PA66, RAL7035	
Weight	RK..C: RKD2..P: RK2..P:	approx. 101 g approx. 106 g approx. 102 g
Touch protection	IP20	
Overvoltage category	III, 6 kV (1.2/50 µs) rated impulse withstand voltage	
Isolation	Input to Output: Input and Output to Case:	4000 Vrms 4000 Vrms
LED indication	Continously ON Green LED when control input is applied	

Note: in the case of the RKD2 models, the two LED indications represent the control status of each independent control. In the case of the RK2 models, the two LEDs represent the status of the common control input and hence both LEDs are ON when the control input is applied to the RK2 and both LEDs are OFF when the control input is removed.

Dimensions

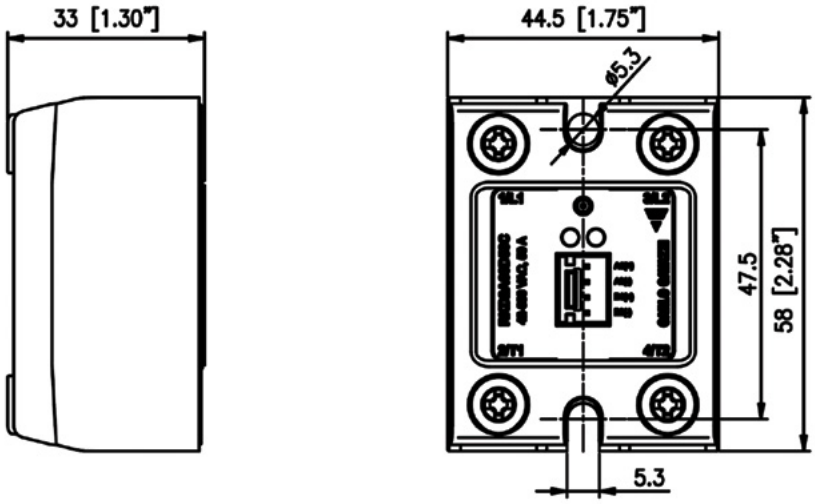

Fig. 1 *RKD2..C*

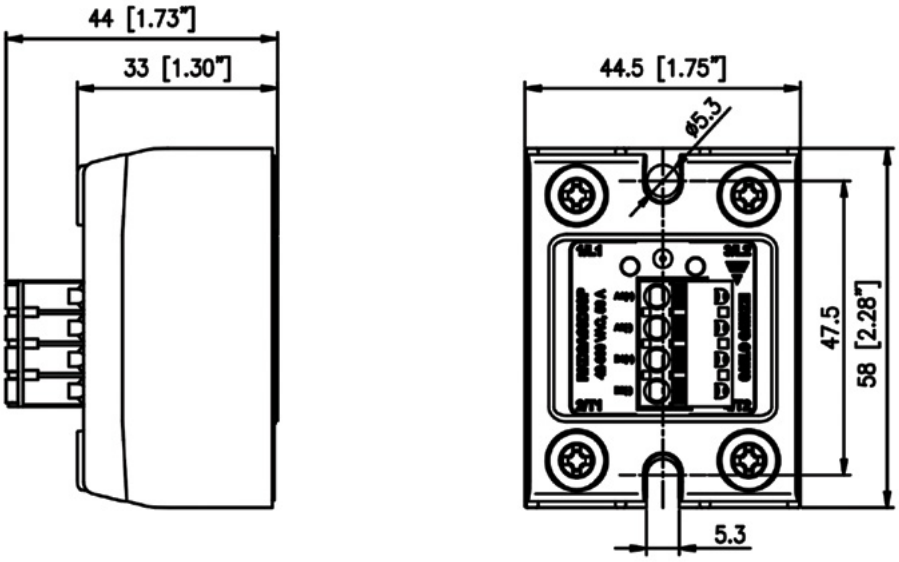

Fig. 2 *RKD2..P*

Dimensions in mm unless otherwise noted.
Tolerances +/- 0.5 mm.

Performance

Output specifications

	RK..23..50	RK..60..50	RK..23..51	RK..60..51	RK..60..75
Operational voltage range, Ue	24 - 265 VAC	42 - 660 VAC	24 - 265 VAC	42 - 660 VAC	42 - 660 VAC
Max. operational current per pole[1]: AC-51 rating	50 AAC				75 AAC
Max. operational current per pole[1]: AC-53a rating	12 AAC				
Operational frequency range	45 - 65 Hz				
Blocking voltage	600 Vp	1200 Vp	600 Vp	1200 Vp	1200 Vp
Output protection	Integrated transil				
Latching voltage (across L-T)	≤ 20V				
Leakage current @ rated voltage	≤ 3 mAAC				
Minimum operational current	250 mAAC		400 mAAC		
Repetitive overload current (t=1s)	< 125 AAC		< 130 AAC		< 150 AAC
Non-repetitive surge current (t=10ms)	550 Ap		775 Ap		1400 Ap
I^2t for fusing (t=10ms), min.	1500 A^2s		3000 A^2s		9800 A^2s
Power factor[2]	> 0.5 @ rated voltage				
Critical dV/dt (@ Tj init = 40˚C)	1000 V/µs				
Endurance testing acc. to UL508	100,000 cycles				

Notes:
1. Max. rated current with suitable heatsink. Refer to heatsink selection tables.
2. Transient voltages exceeding the SSR rated blocking voltage will cause the SSR output to switch ON even if control signal is OFF. This occurrence will last as long as the transient voltage level is higher than the specified blocking voltage of the SSR.

Input specifications

	RKD2	RK2
Control voltage range: A1-A2, B1-B2	4 - 32 VDC	
Pick-up voltage	3.8 VDC	
Drop-out voltage	1.0 VDC	
Maximum reverse voltage	32 VDC	
Max. response time pick-up	1/2 cycle (RK A) 0.1 ms (RK B)	
Response time drop-out	1/2 cycle	
Maximum input current	< 12 mA per pole	< 24 mA

Note: control range below -25°C is 5.5 - 32 VDC

Input current vs. input voltage

RKD2..

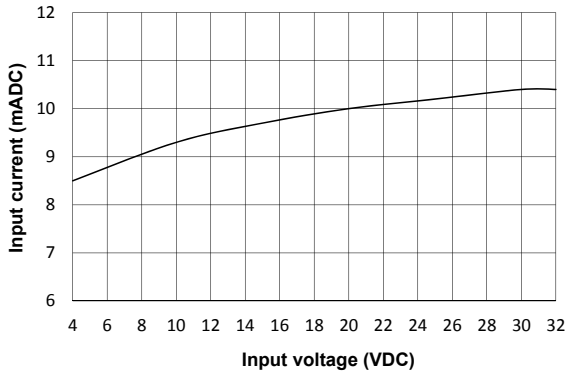

Fig. 3 *RKD2 input current vs. input voltage*

RK2..

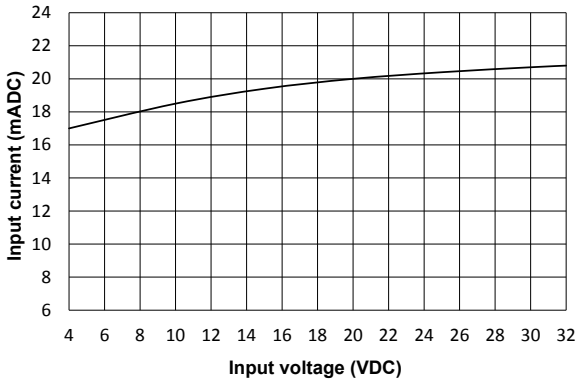

Fig. 4 *RK2 input current vs. input voltage*

Output power dissipation

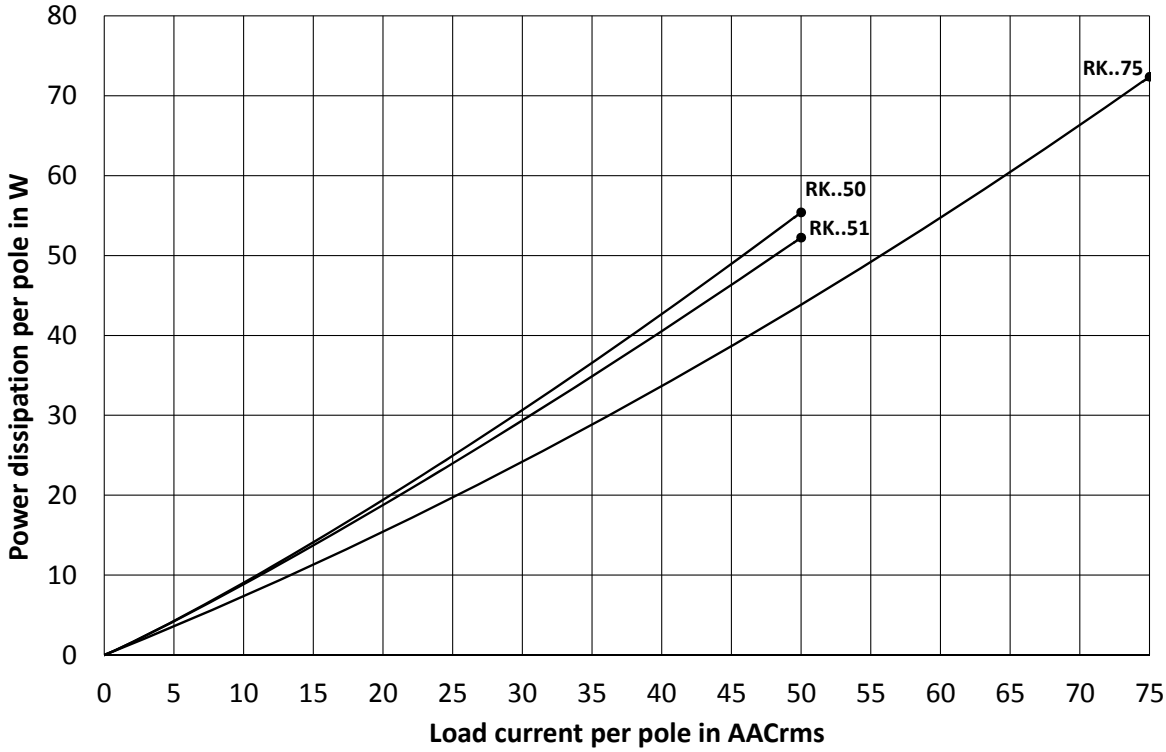

Heatsink selection

Thermal resistance [°C/W] of RK..50..

Load current per pole AC-51, [A]	Ambient temperature [°C]						
	20	30	40	50	60	70	80
50	0.72	0.61	0.50	0.39	0.28	0.18	-
45	0.87	0.74	0.61	0.48	0.36	0.25	0.13
40	1.0	0.91	0.75	0.61	0.47	0.33	0.19
35	1.3	1.1	0.95	0.77	0.60	0.44	0.27
30	1.7	1.4	1.2	1.0	0.7	0.58	0.39
25	2.2	1.9	1.6	1.3	1.0	0.80	0.55
20	3.2	2.7	2.3	1.9	1.5	1.1	0.81
15	5.3	4.4	3.6	2.9	2.3	1.7	1.2
10	12.4	9.6	7.5	5.8	4.4	3.3	2.3
5	nh	nh	nh	nh	17.8	11.0	6.9

Thermal resistance [°C/W] of RK..51..

Load current per pole AC-51, [A]	Ambient temperature [°C]						
	20	30	40	50	60	70	80
50	0.85	0.73	0.61	0.49	0.38	0.27	0.16
45	1.0	0.87	0.73	0.59	0.46	0.34	0.21
40	1.2	1.0	0.88	0.72	0.57	0.42	0.28
35	1.5	1.2	1.0	0.90	0.71	0.53	0.36
30	1.9	1.6	1.3	1.1	0.91	0.69	0.48
25	2.5	2.1	1.8	1.5	1.2	0.92	0.65
20	3.5	3.0	2.5	2.0	1.6	1.2	0.92
15	5.7	4.8	3.9	3.2	2.5	1.9	1.4
10	13.4	10.3	8.0	6.1	4.7	3.5	2.4
5	nh	nh	nh	nh	18.7	11.4	7.1

Thermal resistance [°C/W] of RK..75..

Load current per pole AC-51, [A]	Ambient temperature [°C]						
	20	30	40	50	60	70	80
75.0	0.53	0.45	0.38	0.30	0.23	0.15	-
67.5	0.64	0.55	0.46	0.37	0.28	0.20	0.12
60.0	0.78	0.67	0.56	0.46	0.36	0.26	0.16
52.5	0.96	0.83	0.70	0.58	0.45	0.34	0.22
45.0	1.2	1.0	0.89	0.74	0.59	0.44	0.30
37.5	1.5	1.3	1.1	0.97	0.78	0.60	0.42
30.0	2.2	1.9	1.6	1.3	1.0	0.83	0.60
22.5	3.4	2.9	2.4	2.0	1.6	1.2	0.91
15.0	6.5	5.4	4.4	3.5	2.8	2.1	1.5
7.5	nh	nh	16.0	11.3	8.1	5.7	3.9

Notes:
- The indicated thermal resistance values are applicable only for the RK with the pre-attached thermal interface.
- 'nh' means no heatsink necessary. The SSR should still be tightened to a surface to ensure optimal thermal dissipation.

Thermal data

	RK..50	RK..51	RK..75
Operating temperature	-40°C to 80°C (-40°F to 176°F)		
Storage temperature	-40°C to 100°C (-40°F to 212°F)		
Max. junction temperature	< 120°C (248°F)		< 115°C (239°F)
Junction to heatsink thermal resistance, R_{thjs} (including pre-attached thermal interface)	2-poles: 0.25 °C/W 1-pole: 0.5 °C/W	2-poles: 0.2 °C/W 1-pole: 0.4 °C/W	2-poles: 0.16 °C/W 1-pole: 0.32 °C/W

Note: the indicated thermal resistance R_{thjs} (2-poles) is applicable when both poles are utilised. If only one of the poles is used, the applicable R_{thjs} is the R_{thjs} indicated for 1-pole.

Applications

Thermal stress will reduce the lifetime of the solid state relay. It is hence necessary to select an appropriate heatsink to ensure that the maximum junction temperature of the solid state relay is not exceeded. Surrounding temperature, load current and duty cycle have to be taken into account. The Heatsink Selection tables as well as the Online Heatsink Selector tool on https://gavazziautomation.com/nsc/HQ/EN/solid_state_relays provide indications of the heatsink size necessary to avoid thermal overload.
Further checks can be done in the application by verification of the heatsink temperature. The maximum allowed heatsink temperature can be calculated as follows:

$T_h = T_j - (2 * P_d * R_{thjs\ 2\text{-}poles})$ or $T_h = T_j - (P_d * R_{thjs\ 1\text{-}pole})$

Where,
T_h = max. heatsink temperature
T_j = max. junction temperature
P_d = output power dissipation per pole
R_{thjs} = thermal resistance junction to heatsink (including thermal interface), $R_{thjs\ 1\text{-}pole} = 2 * R_{thjs\ 2\text{-}poles}$

Example 1: load current through the two poles is identical.
SSR utilised is the RKD2A60D50P with a load current of 40Arms per pole. The maximum heatsink temperature shall not exceed:
$T_h = T_j - (2 * P_d * R_{thjs\ 2\text{-}poles})$

$T_h = 120°C - (2 * 43W * 0.25°C/W)$

$T_h = 98.5°C$

Example 2: load current through the two poles is different.
SSR utilised is the RKD2A60D50P with a load current of 40Arms through pole 1 and 10Arms through pole 2. In this case, since the load current through the two poles differ, each pole has to be calculated separately ($R_{thjs\ 2\text{-}poles}$ cannot be utilised). The max. heatsink temperature is the lower heatsink temperature obtained when the calculation is done for each pole independently.
$T_h = T_j - (P_d * R_{thjs\ 1\text{-}pole})$

$T_{hpole1} = 120°C - (43W * 0.5°C/W) = 98.5°C$

$T_h = T_j - (P_d * R_{thjs\ 1\text{-}pole})$

$T_{hpole2} = 120°C - (9W * 0.5°C/W) = 115.5°C$

Hence, in this case the max. heatsink temperature shall not exceed 98.5°C.

Compatibility and conformance

Approvals	
Standards compliance	LVD: EN/IEC 60947-4-3 EMCD: EN/IEC 60947-4-3 EE: EN 60947-4-3 EMC: EN 60947-4-3 cURus: UL508 recognized (E80573), NRNT2, NRNT8 CSA: C22.2 No.14 (204075) VDE: VDE 0660-109

Electromagnetic compatibility (EMC) - Immunity	
Electrostatic discharge (ESD)	EN/IEC 61000-4-2 8 kV air discharge (PC2), 4 kV contact (PC1)
Radiated radio frequency	EN/IEC 61000-4-3 10 V/m, from 80 MHz to 1 GHz (PC1) 10 V/m, from 1.4 to 2 GHz (PC1) 3 V/m, from 2 to 2.7 GHz (PC1)
Electrical fast transient (burst)	EN/IEC 61000-4-4 Output: 2 kV, 5 kHz (PC2) Input: 1 kV, 5 kHz (PC1)
Conducted radio frequency	EN/IEC 61000-4-6 10 V/m, from 0.15 to 80 MHz (PC1)
Electrical surge	EN/IEC 61000-4-5 Output, line to line: 1 kV (PC2) Output, line to earth: 2 kV (PC2) Input, line to line: 500 V (PC2) Input, line to earth: 500 V (PC2)
Voltage dips	EN/IEC 61000-4-11 0% for 0.5, 1 cycle (PC2) 40% for 10 cycles (PC2) 70% for 25 cycles (PC2) 80% for 250 cycles (PC2)
Voltage interruptions	EN/IEC 61000-4-11 0% for 5000 ms (PC2)

Electromagnetic compatibility (EMC) - Emissions	
Radio interference field emission (radiated)	EN/IEC 55011 Class A: from 30 to 1000 MHz
Radio interference voltage emissions (conducted)	EN/IEC 55011 Class A: from 0.15 to 30 MHz (External filter may be required - refer to Filtering section)

Notes:

- Control input lines must be installed together to maintain products' susceptability to Radio Frequency interference.
- Use of AC solid state relays may, according to the application and the load current, cause conducted radio interferences. Use of mains filters may be necessary for cases where the user must meet E.M.C requirements. The capacitor values given inside the filtering specification tables should be taken only as indications, the filter attenuation will depend on the final application.

- Performance Criteria 1 (PC1): No degradation of performance or loss of function is allowed when the product is operated as intended.
- Performance Criteria 2 (PC2): During the test, degradation of performance or partial loss of function is allowed. However when the test is complete the product should return operating as intended by itself.
- Performance Criteria 3 (PC3): Temporary loss of function is allowed, provided the function can be restored by manual operation of the controls.

Filter connection diagram (per pole)

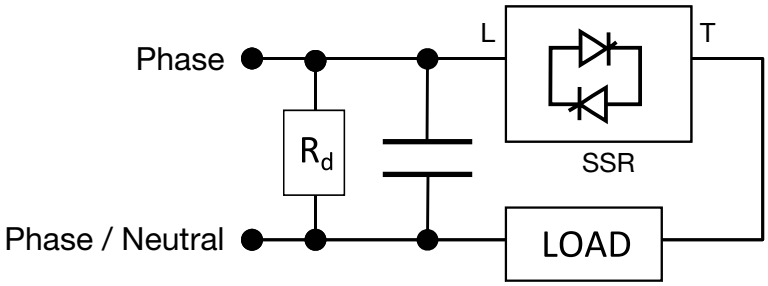

R_d = 1MΩ, 0.5W

Filtering

Part number	Suggested filter for EN 55011 Class A compliance (per pole)	Maximum heater current [AAC]
RK(D)2A23D50	no filter needed	9
	150nF / 275V / X1	25
	330nF / 275V / X1	50
RK(D)2A23D51	no filter needed	10
	150nF / 275V / X1	25
	330nF / 275V / X1	50
RK(D)2A60D50	no filter needed	7.5
	150nF / 760V / X1	25
	330nF / 760V / X1	40
RK(D)2A60D51	no filter needed	5
	220nF / 760V / X1	30
	220nF / 760V / X1	40
RK(D)2A60D75	no filter needed	5
	330nF / 760V / X1	25
	470nF / 760V / X1	40
RK(D)2B60D50	220nF / 760V / X1	25
	330nF / 760V / X1	40
RK(D)2B60D75	330nF / 760V / X1	25
	470nF / 760V / X1	40

For class B compliance contact your Carlo Gavazzi representative.

Environmental specifications

Relative humidity	95% non-condensing @ 40°C
Pollution degree	2 (non-conductive pollution with possibilities of condensation)
Installation altitude	0-1000m. Above 1000m derate linearly by 1% of FLC per 100m up to a maximum of 2000m
Vibration resistance	5g / axis (2-100Hz, IEC60068-2-6, EN 50155, EN 61373)
Impact resistance	15/11 g/ms (EN 50155, EN 61373)
EU RoHS compliant	Yes
China RoHS	25
UL flammability rating (housing)	UL 94 V0
Glow wire ignition temperature, Glow wire flammability index	Conforms to EN 60335-1 requirements

The declaration in this section is prepared in compliance with People's Republic of China Electronic Industry Standard SJ/T11364-2014: Marking for the Restricted Use of Hazardous Substances in Electronic and Electrical Products.

Part Name	**Toxic or Harardous Substances and Elements**					
	Lead (Pb)	Mercury (Hg)	Cadmium (Cd)	Hexavalent Chromium (Cr(VI))	Polybrominat-ed biphenyls (PBB)	Polybromi-nated diphenyl ethers (PBDE)
Power Unit Assembly	x	O	O	O	O	O

O: Indicates that said hazardous substance contained in homogeneous materials fot this part are below the limit requirement of GB/T 26572.

X: Indicates that said hazardous substance contained in one of the homogeneous materials used for this part is above the limit requirement of GB/T 26572.

这份申明根据中华人民共和国电子工业标准 SJ/T11364-2014：标注在电子电气产品中限定使用的有害物质

零件名称	有毒或有害物质与元素					
	铅 (Pb)	汞 (Hg)	镉 (Cd)	六价铬 (Cr(VI))	多溴化联苯 (PBB)	多溴联苯醚 (PBDE)
功率单元	x	O	O	O	O	O

O:此零件所有材料中含有的该有害物低于GB/T 26572的限定。

X: 此零件某种材料中含有的该有害物高于GB/T 26572的限定。

Short circuit protection, co-ordination type 2 (per pole)

Part No.	Prospective short circuit current [kArms]	Ferraz Shawmut (Mersen)		Siba		Voltage [VAC]
		Max fuse size [A]	Part number	Max fuse size [A]	Part number	
RK..50	10	50	gR (GRC) 22x58 FR22UD69V50T Holder: CMS22xI	50	50 142 06.50 Holder: 51 060 05.xS	600
RK..51	10	63	gR (GRC) 22x58 FR22UD69V63T Holder: CMS22xI	63	50 142 06.63 Holder: 51 060 05.xS	600
RK..75	10	80	gR (GRC) 22x58 FR22GR69V80T Holder: CMS22xI	100	50 142 06.100 Holder: 51 060 05.xS	600

Where ‘x’ in Holder reference signifies the no. of poles.

Connection diagrams

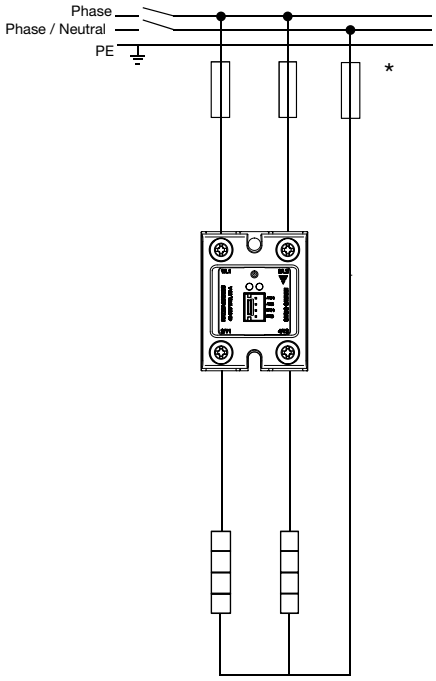

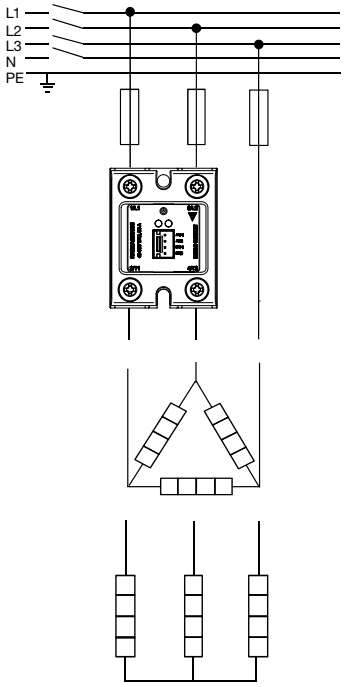

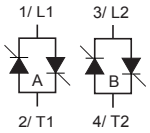

Control input A (A1-A2) activates pole L1-T1 and control input B (B1-B2) activates pole L2-T2 for the RKD2..

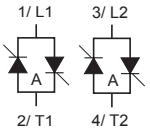

Control input A (A1-A2) activates both pole L1-T1 and pole L2-T2 for the RK2..

* depends on system requirements

Functional diagram

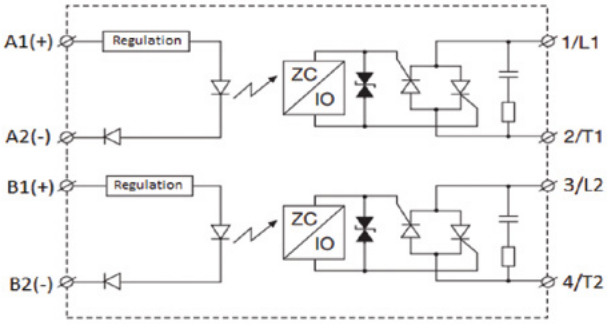

Fig. 5 *RKD2*

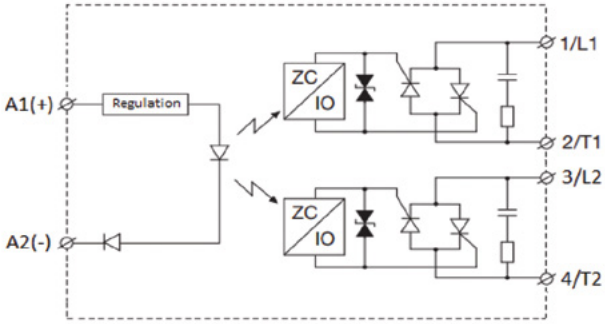

Fig. 6 *RK2*

Installation

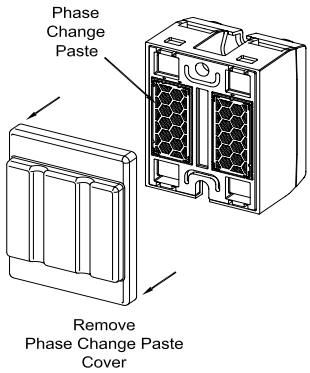

Fig. 7 *Remove cover before mounting on the panel chassis or heatsink.*

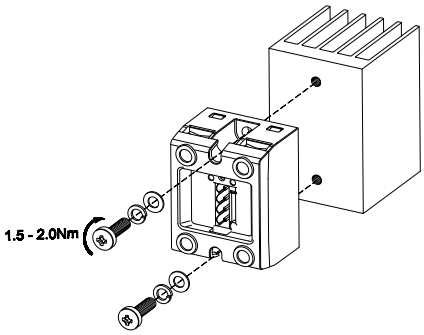

Fig. 8 *Tighten screws alternately to max. 0.5 Nm and then continue to max. 2.0 Nm.*

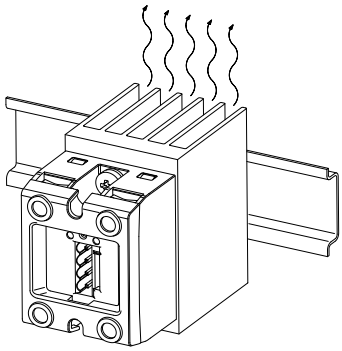

Fig. 9 *Mount heatsink with fins in the vertical orientation to guarantee the best possible airflow through the heatsink.*

Connection specifications

	1/L1, 2/T1, 3/L2, 4/T2 (RK..C, RK..P)		A1, A2, B1, B2 (RK..P)
	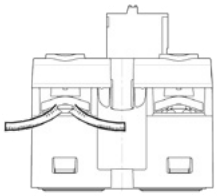	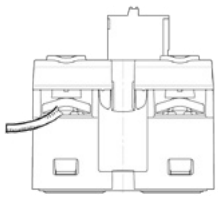	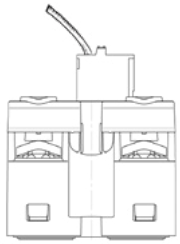
Mounting screws (SSR to heatsink)	M5, not provided with SSR (refer to SRWKITM5X10MM in the References section)		
Mounting torque (SSR to heatsink)	1.5 - 2.0 Nm (13.3 - 17.7 lb-in)		
Conductors	Use 75˚C copper (Cu) conductors		Use 60/75˚C copper (Cu) conductors
Stripping length	12 mm		8-9 mm
Connection type	M4 screw with captivated washer		Spring
No. of positions	- -		4 (RKD2..) 2 (RK2..)
Wire entry	-		Top
Rigid (solid & stranded) UR/CSA rated data	2 x 2.5.. 6.0 mm² 2 x 14.. 10 AWG	1 x 2.5.. 6.0 mm² 1 x 14.. 10 AWG	0.5.. 2.5 mm² 26.. 12 AWG
Flexible with or without end sleeve	2 x 1.0.. 2.5 mm² 2 x 2.5.. 6.0 mm² 2 x 18.. 14 AWG 2 x 14.. 10 AWG	1 x 1.0.. 6.0 mm² 1 x 14.. 10 AWG	0.5.. 2.5 mm² 26.. 12 AWG
Flexible with end sleeve using TWIN ferrules	-		0.5.. 1.0 mm²
Torque specifications	Pozidrive bit 2 (PZ2) UL: 2.0 Nm (17.7 lb-in) IEC: 1.5 - 2.0 Nm (13.3 - 17.7 lb-in)		-
Aperture for termination lug	12.5 mm, lug thickness shall not exceed 4 mm		-

Control termination

RK..C	RKD2	RK2
Connection type	4 pins, pitch 2.54mm square pin 0.64' with integrated lockable connector	2 pins, pitch 2.54mm square pin 0.64' with integrated lockable connector
Mating options	3-640441-2 with connector strain relief cover 643075-2, from TE Connectivity 3-640441-4 with connector strain relief cover 643075-4, from TE Connectivity	
Accessories	RCK4-100-1, RCK2-100-1 terminated cable	

RK..P	RKD2	RK2
Connection type	4-way, 4-positions, pitch 5.08mm for plug-gable terminal	4-way, 2-positions, pitch 5.08mm for plug-gable terminal
Mating options	Plug provided with SSR; Other options noted in section Screw plugs, Spring plugs	
Accessories	Plugs also available as Accessories: RK4MT for RKD2.., RK2MT for RK2..	

Screw plugs

Cable entry	Top	Left	Right	Twin, sides
	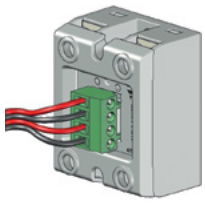	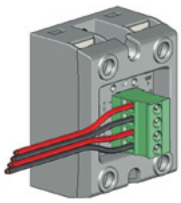	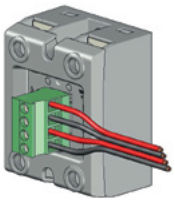	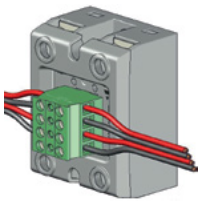
Manufacturer	Phoenix Contact			
Model	4 positions: MSTBT 2,5/ 4-ST-5,08	4 positions: MVSTBW 2,5/ 4-ST-5,08	4 positions: MVSTBR 2,5/ 4-ST-5,08	4 positions: TVMSTB 2,5/ 4-ST-5,08
	2 positions: MSTBT 2,5/ 2-ST-5,08	2 positions: MVSTBW 2,5/ 2-ST-5,08	2 positions: MVSTBR 2,5/ 2-ST-5,08	2 positions: TVMSTB 2,5/ 2-ST-5,08
Reference	4 positions: 1780002	4 positions: 1792773	4 positions: 1792265	4 positions: 1719024
	2 positions: 1779987	2 positions: 1792757	2 positions: 1792249	2 positions: 1719008
Wire range	0.25 - 2.5 mm^2			
Screw	M3			
Stripping length	7 mm			
Tightening torque	0.5 - 0.6 Nm			
Product depth with mounted connector	37.2 mm	45.0 mm		44.7 mm

Cable entry	Top	Twin, top
	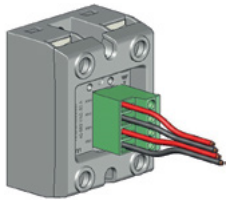	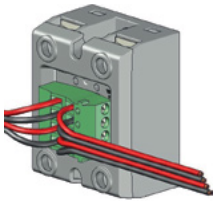
Manufacturer	Phoenix Contact	
Model	4 positions: FRONT-MSTB 2,5/ 4-ST-5,08	4 positions: TMSTBP 2,5/ 4-ST-5,08
	2 positions: FRONT-MSTB 2,5/ 2-ST-5,08	2 positions: TMSTBP 2,5/ 2-ST-5,08
Reference	4 positions: 1777303	4 positions: 1853036
	2 positions: 17773280	2 positions: 1853010
Wire range	0.25 - 2.5 mm^2	
Screw	M2.5	M3
Stripping length	10 mm	7 mm
Tightening torque	0.5 - 0.6 Nm	
Product depth with mounted connector	46.5 mm	40.5 mm

Spring plugs

Cable entry	Top	Left	Right	Twin, top
	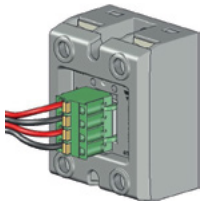	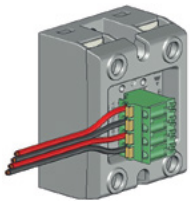	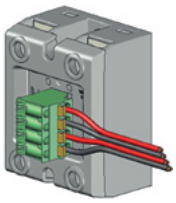	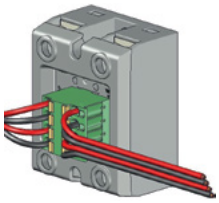
Manufacturer	Phoenix Contact			
Model	4 positions: FKCT 2,5/ 4-ST-5,08	4 positions: FKCVW 2,5/ 4-ST-5,08	4 positions: FKCVR 2,5/ 4-ST-5,08	4 positions: TFKC 2,5/ 4-ST-5,08
	2 positions: FKCT 2,5/ 2-ST-5,08	2 positions: FKCVW 2,5/ 2-ST-5,08	2 positions: FKCVR 2,5/ 2-ST-5,08	2 positions: TFKC 2,5/ 2-ST-5,08
Reference	4 positions: 1902136	4 positions: 1873676	4 positions: 1873977	4 positions: 1962626
	2 positions: 1902110	2 positions: 1873650	2 positions: 1873951	2 positions: 1962600
Wire range	0.25 - 2.5 mm^2			
Stripping length	10 mm			
Product depth with mounted connector	44.6 mm	45.6 mm	45.6 mm	44.7 mm

Packaging

RK...X30

- Packing qty.: 30 pcs.
- Weight: 3.03 kg

COPYRIGHT ©2022.
Content subject to change.
Download the PDF: https://gavazziautomation.com